OPERATOR'S MANUAL

FOR ST4949F-u, ST4949B-u, ST4949F-u, ST4933B-u

(Version 2.03.2)

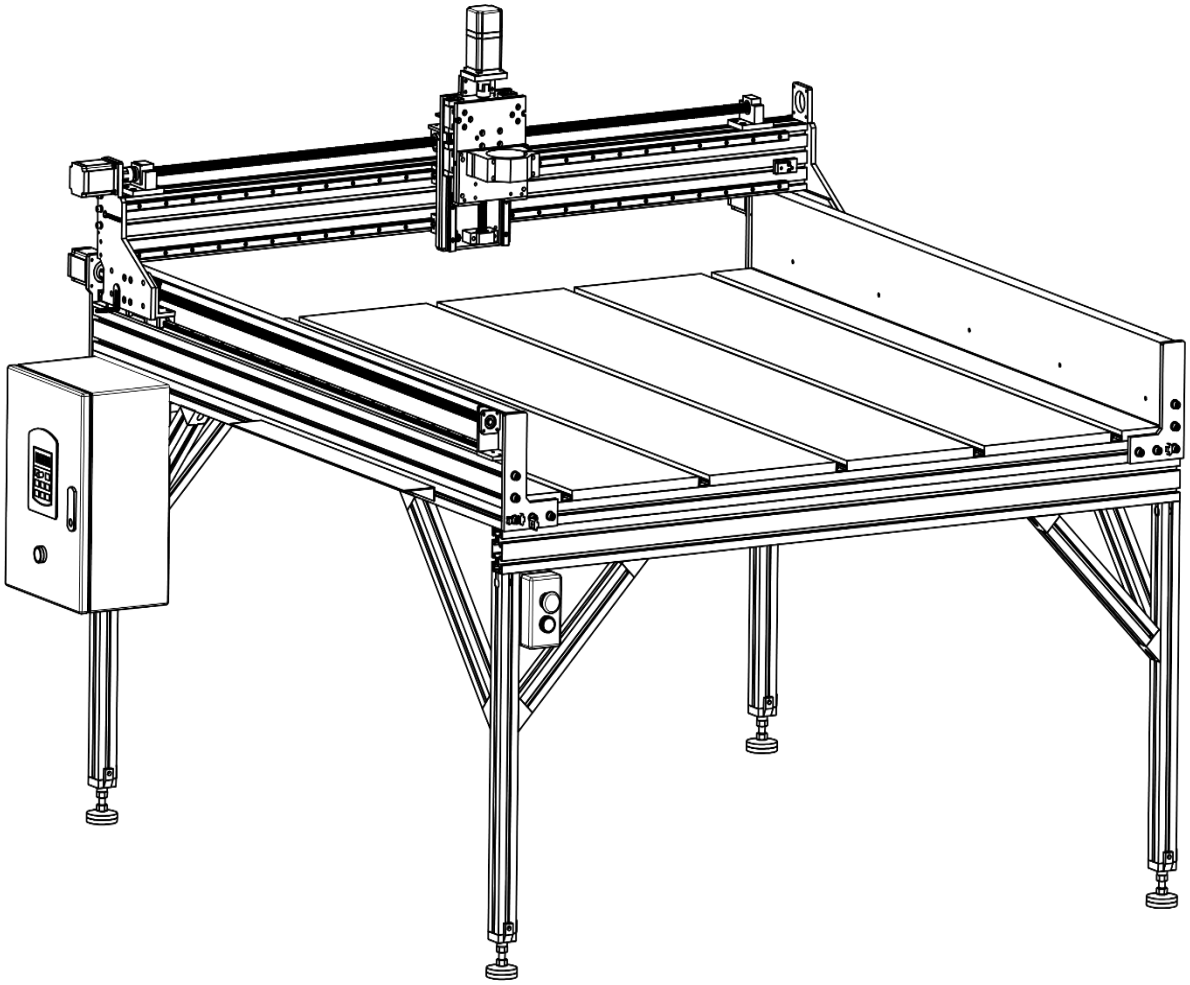

CARVEMATE

CNC ROUTER

(For North America Only)

⚠ **WARNING:**

For your safety and to prevent machine damage, read and understand this manual before operating the product.

Table of Contents

GETTING STARTED 1
- Know Your Cnc Router 1
- Electrical 2
- Dimensions 2
- Cutting Capacity 2
- Tools Needed 2

BASE 3
- Parts List 3
  - Parts Included 3
  - Parts Not Included 4
- Assembly 5
  - Assembling Brackets 5
  - Y-Beams Orientation For Base 5
  - Assembling Front And Rear X-Cross Bars 6
  - Assembling Middle X-Cross Bars 6
  - Assembling Base Frame 7
  - Mounting Base Frame Onto Bench Top 9
  - Installing Switch Box 9
  - Assembling Wasteboards Onto Base Frame 10

STAND 11
- Parts List 11
  - Parts Included 11
  - Assembling Brackets 13
  - Attaching Cross Braces To Base 14
  - Assembling Reinforcement Beams 15
  - Attaching Reinforcement Beams To Base 16
  - Attaching Cross Braces And Legs To Stand 17
  - Assembling Leveling Foots 18
  - Positioning And Leveling Base And Stand 18
  - Installing Switch Box 18

XYZ UNIT 21
- Parts List 21
  - Parts Included 21
- Assembly 23
  - Installing Limit Sensors 23
  - Assembling Y-Assemblies To Base 23

Installing Joining Brackets To X-Assembly 25
Assembling X-Assembly To Y-Axis 26
Assembling Z-Assembly 28
Z-Assembly Squaring 29
Squaring Z-Assembly In X-Direction 29
Squaring Z-Assembly In Y-Direction 30
DRAG CHAIN 31
Parts List 31
Parts Included 31
Assembly 32
Assembling Drag Chain Mounts 32
Assembling Drag Chain Brackets 34
Assembling Y Drag Chains 35
Assembling X Drag Chains 36
ELECTRONICS 37
Parts List 37
Parts Included 37
Assembly 38
Installing Motors 38
Installing Limit Sensors 39
Installing Vfd Enclosure 40
Installing Spindle 41
Cable Wiring 42
OPERATION 45
Coordinate System 45
Setup 46
Adjusting Limit Sensors To Set Machine Home Position 46
Mechanical Check 47
Controller 47
Connecting Controller To Ugs 48
Configuring Grbl 49
Primary Software Operations 50
Limit Sensor Check 51
Motion And Speed Check 52
Adjustment 53
X-Axis Self-Squaring 53
Z-Axis Tramming 53
Pendant Box 54

Z - Axis Probing 54
VFD and Spindle 56
TROUBLESHOOTING 58

GETTING STARTED

KNOW YOUR CNC ROUTER

- ST4949B, ST4933B: Bench top models without floor stand.
- ST4949F, ST4933F: Full set models with floor stand.

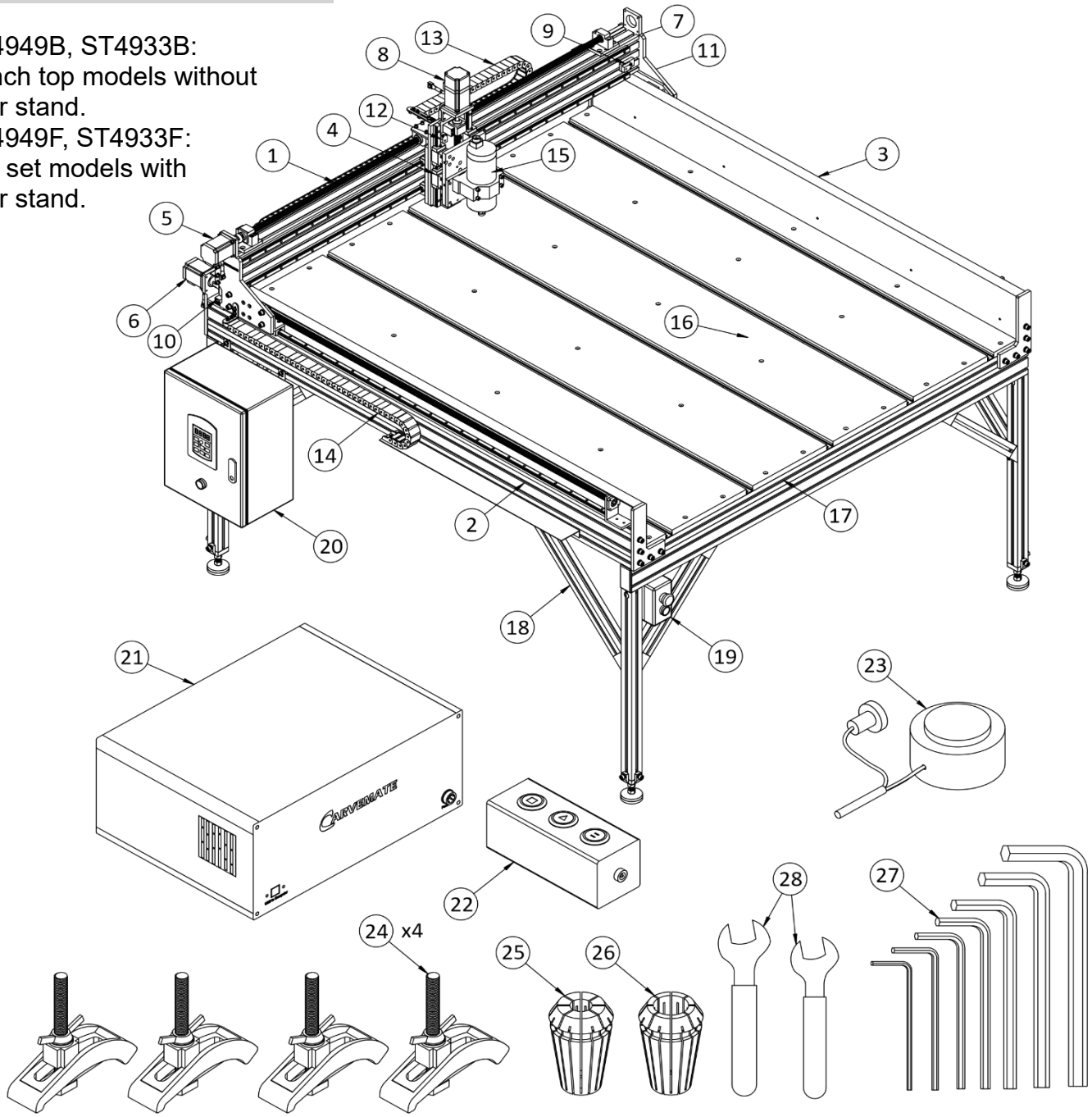

1:	X-Asembly	2:	Left Y-Assembly	3:	Right Y-Assembly
4:	Z-Assembly	5:	X-Motor	6:	Left Y-Motor
7:	Right Y-Motor	8:	Z-Motor	9:	X-Limit Sensor
10:	Left Y-Limit Sensor	11:	Right Y-Limit Sensor	12:	Z-Limit Sensor
13:	X-Drag Chain	14:	Y-Drag Chain	15:	Spindle
16:	Wasteboard	17:	Base	18:	Stand
19:	Switch Box	20:	VFD Enclosure	21:	Controller
22:	Pendant Box	23:	Touch Probe	24:	Hold-Down Clamps x4
25:	Collets, 6 mm (with Spindle)	26:	Collet, ¼ inch (with Spindle)	27:	Allen Key Set
28:	Spindle Wrench Set				

GETTING STARTED

ELECTRICAL

- The machine's power supply must be **120V, 60 Hz AC**, connected to a **grounded**, 3-prong outlet. Ungrounded 2-prong outlets are prohibited.
- The VFD controller cannot operate on a GFCI (Ground Fault Circuit Interrupter) outlet. Only use non-GFCI outlets to power the VFD.
- A **15-amp** circuit is required for 1.5 kw spindle, and a **20-amp** circuit for 2.2 kw spindle.
- Use only 3-wire extension cord with 3-prong grounding plug and 3-pole receptacle.
- Select the proper extension cord gauge from the table below based on cord length.

Wire Size (AWG) (When Using 120V Only)

Ampere Rating	Cord Length			
	25' (7.6m)	**50' (15m)**	**75' (22.8m)**	**100' (30.4m)**
< 5	16	16	16	14
5 to 8	16	16	14	12
8 to 12	14	14	12	10
12 to 15	12	12	10	10
15 to 20	10	10	10	-

DIMENSIONS

Machine Dimensions:

- ST4949B: Width: 1800 mm (71 in), Depth: 1738 mm (68.4 in), Height: 632 mm (24.9 in)
- ST4933B: Width: 1800 mm (71 in), Depth: 1318 mm (51.9 in), Height: 632 mm (24.9 in)
- Stand height: 836 mm (33 in)
- Height including stand: 1468 mm (57.8 in)

CUTTING CAPACITY

- X: 1260 mm (49.6 in)
- Y: ST4949B, F: 1260 mm (49.6 in); ST4933B,F: 840 mm (33.07 in)
- Z: 132 mm (5.2 in) above 19 mm (0.75 in) wasteboard
- Z clearance: 130 mm (5.1 in)

TOOLS NEEDED

The following tools (not included) are needed for assembly and adjustment:

- Tape measure: metric
- Engineer's square: minimum: 250 mm (10 in)
- Rubber mallet
- Level: minimum length: 1200 mm (48 in), recommended length: 1700 mm (67 in)
- Phillips screwdriver
- Adjustable wrench or open-end wrench: 5.5 mm, 7 mm, 13mm

BASE PARTS LIST

PARTS INCLUDED

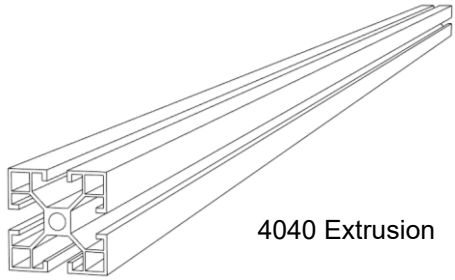

4040 Extrusion

	ST4949B, F		ST4933B, F	
Model	Y-Beam	X-Cross Bar	Y-Beam	X-Cross Bar
Part Number	AL114	AL12	AL113	AL12
Length	1630 mm	1444 mm	1210 mm	1444 mm
Quantity	2	5	2	5

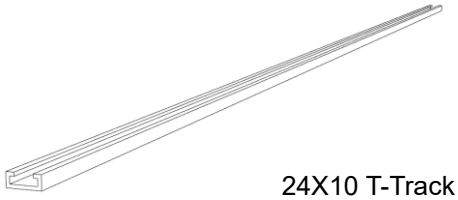

24X10 T-Track

	ST4949B, F	ST4933B, F
Model	T-Track	T-Track
Part Number	AL64	AL63
Length	1630 mm	1210 mm
Quantity	5	5

Model	Corner Bracket 4080	Angle Bracket	Corner Bracket 4040
Part Number	B1	B2	B3
Quantity	4	4	12

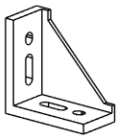

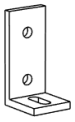

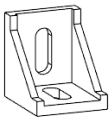

Model	40M5 T-Nut	40M6 T-nut	40M8 T-Nut	M8x25 Galvanized Hex Head Tapping Screw
Part Number	NS45	NS46	NS48	FGQ825
Quantity	25	82	8	4 (not used for ST49xxF)

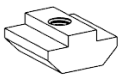

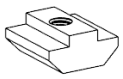

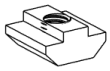

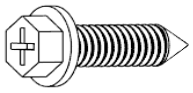

Model	M5x14 Galvanized Flat Head Screw	M6x25 Galvanized Flat Head Screw	M6x20 Galvanized Socket Head Screw with Lock Washer and Flat Washer
Part Number	FGD514	FGD625	FGA620, FLG6, FFG62
Quantity	25	38	44

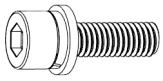

Model	M4x20 Galvanized Round Head Self- Tapping Screw
Part Numbe	FGT420
Quantity	4

PARTS NOT INCLUDED

WASTEBOARDS

- Disposable wasteboards, mounted on the base surface as the work surface, are not included. Use MDF boards with a minimum thickness of 19 mm (3/4 in).
- The wasteboards include six MDF boards with pre-drilled screw holes, separated by five aluminum T-tracks (AL6).
- Board widths, as shown in the diagram, may vary based on T-track (AL6) arrangement.
- The MDF board length should be 1628 mm (64-1/8 in) for ST4949 or 1208mm (47-9/16 in) for ST4933.
- Total width of all six boards should not exceed 1320 mm (52 in).
- Additional T-tracks, screws (FG625), and spring nuts (NS6) can be purchased to enhance workpiece holding capacity. Wasteboards amount and dimensions need to be adjusted accordingly.
- If the hole spacing (397.5 mm or 292.5 mm) is changed, reposition the three middle X- cross bars (AL12) and re-drill the countersunk holes in the T-tracks, as the original pre-drilled holes will no longer align. (See Section 7 “ASSEMBLING BASE FRAME”).

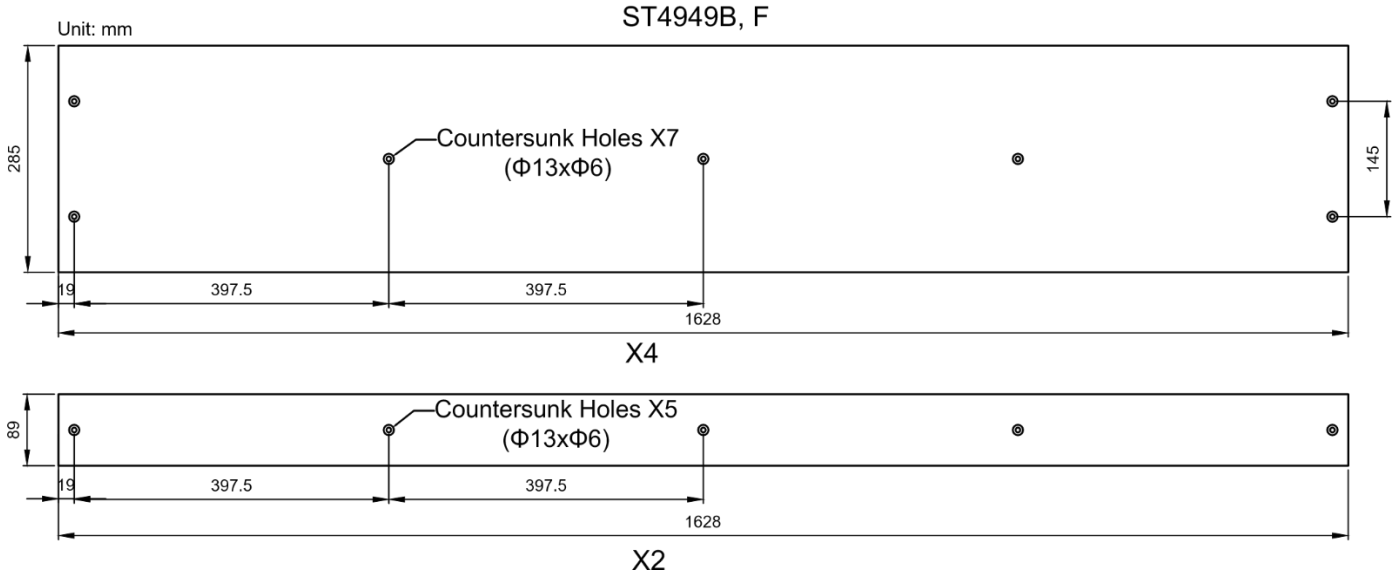

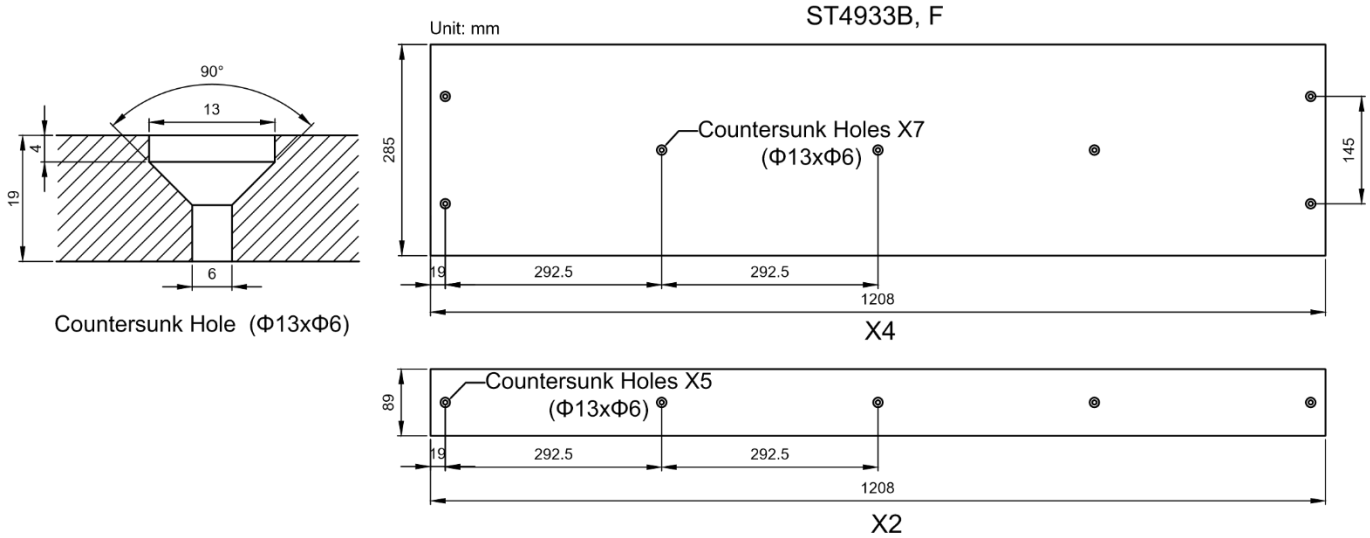

BASE ASSEMBLY

FOCUS ON:

- Checking for pre-inserted T-nuts before assembly.
- Aligning all top surfaces of the aluminum extrusions so they are flush.
- Aligning the side surfaces of the X-cross members flush with the ends of the Y-beams.
- Ensuring the base frame is assembled square and stable.

ASSEMBLING BRACKETS

NOTE:
IF YOUR MODEL IS ST4949F OR ST4933F WITH A STAND, THE FOUR ANGLE BRACKETS ⑤ WILL BE ASSEMBLED LATER IN THE "STAND ASSEMBLY" SECTION.

- Assemble **Corner Brackets 4040** ①, **Corner Brackets 4080** ②, and **Angle Brackets** ⑤ (ST4949B, ST4933B only) using **40M6 T-Nuts** ③ and **M6x20 Galvanized Socket Head Screw Sets** ④ . Do not tighten the screws.

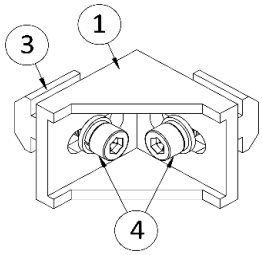

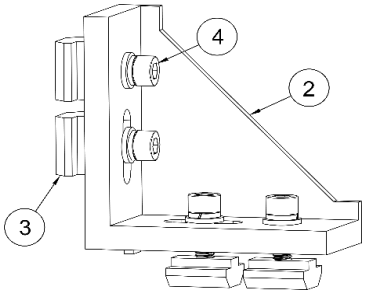

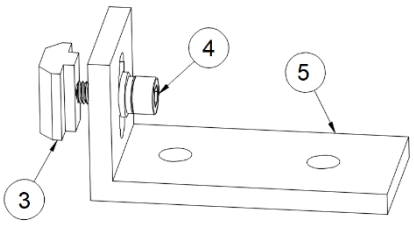

For ST4949B, ST4933B Only

Key No.	Part Number	Model	Quantity
1	B3	Corner Bracket 4040	12
2	B1	Corner Bracket 4080	4
3	NS46	40M6 T-Nut	44(40)
4	FGA620, FLG6, FFG62	M6x20 Galvanized Socket Head Screw with Lock Washer and Flat Washer	44(40)
5	B2	Angle Bracket	4

Y-BEAMS ORIENTATION FOR BASE

Aluminum extrusions may have slight bends from manufacturing. Position the flatter side of each Y-Beam (AL113 and AL114) facing upward, and the more curved sides facing outward along the left and right edges of the base. Ensure both beams curve inward toward each other, creating a gap in the center rather than at the ends. This central gap provides space to adjust the three middle X-cross bars.

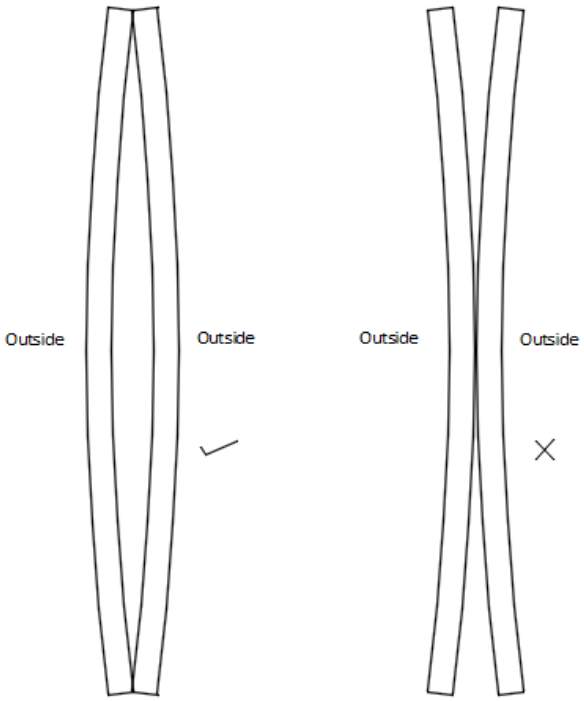

BASE ASSEMBLY

ASSEMBLING FRONT AND REAR X-CROSS BARS

NOTE:
IF YOUR MODEL IS ST4949F OR ST4933F WITH A STAND, SLIDE TWO 40M6 T-NUTS ⑤ INTO THE INNER SLOTS OF TWO X-CROSS BARS BEFORE ATTACHING THE CORNER BRACKETS 4080 ②.

- The **40M6 T-Nuts ③ and 40M5 T-Nuts ④ look nearly identical. Double-check to avoid mixing them up.**
- Slide **40M6 T-Nuts** ③ and **40M5 T-Nuts** ④ into the top slots of the two **X-Cross Bars** ① in the sequence shown in the diagram (③④③③④③③④③③④③③④③).
- Slide eight **40M8 T-Nuts** ⑤ into the outer slots of the two **X-Cross Bars** ①.
- Slide four assembled **Corner Brackets 4080** onto the side ends of the two **X-Cross Bars** ①.
- These Two **X-Cross Bars** ① will form the front and rear X-cross members of the base unit.

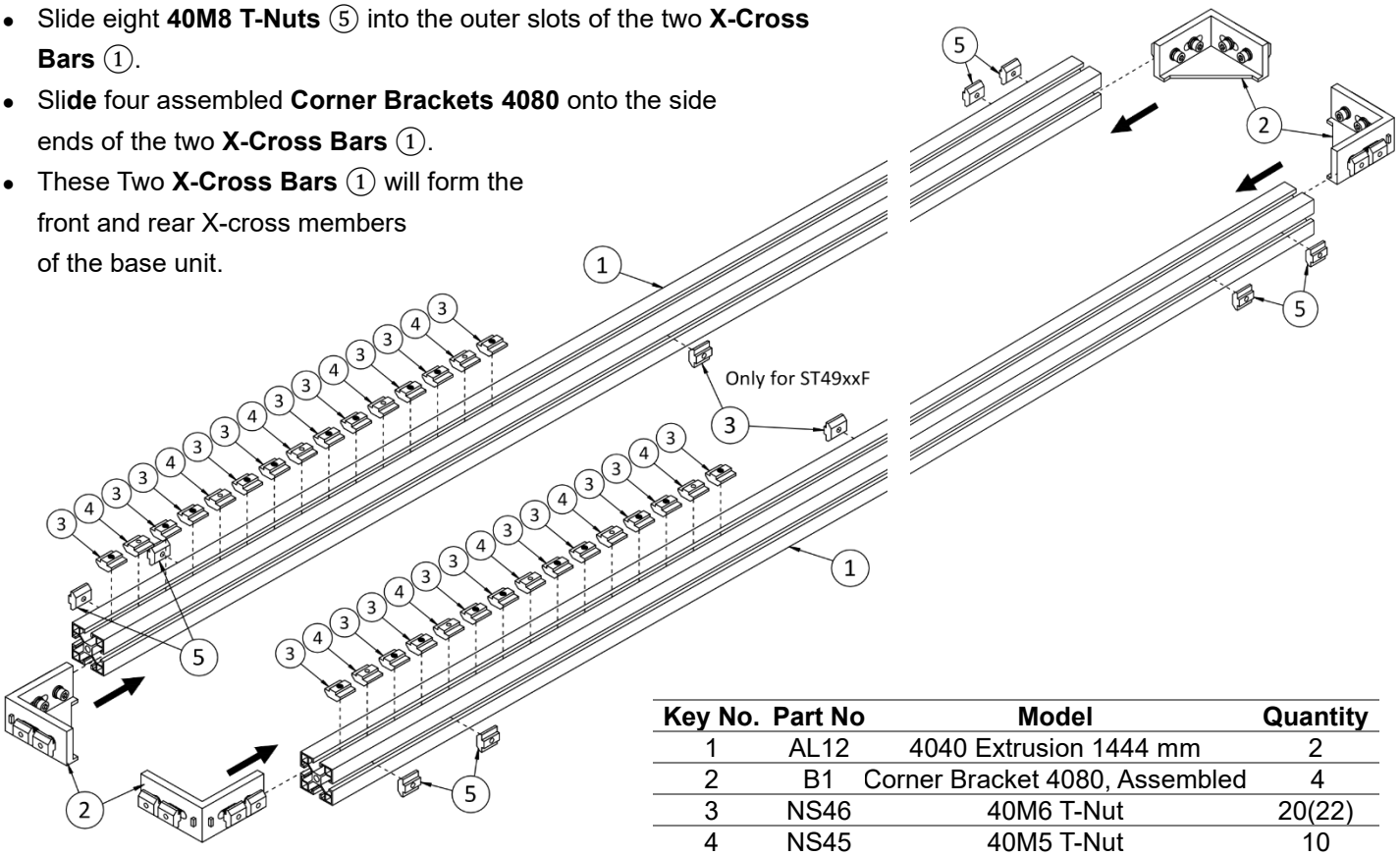

Key No.	Part No	Model	Quantity
1	AL12	4040 Extrusion 1444 mm	2
2	B1	Corner Bracket 4080, Assembled	4
3	NS46	40M6 T-Nut	20(22)
4	NS45	40M5 T-Nut	10
5	NS48	40M8 T-Nut	8

ASSEMBLING MIDDLE X-CROSS BARS

- Slide twelve assembled **Corner Brackets 4040** ② onto the side ends of the three **X-Cross Bars** ①.
- Slide **40M6 T-Nuts** ③ and **40M5 T-Nuts** ④ into the top slots of the three **X-Cross Bars** ① in the sequence shown in the diagram (③④③④③④③④③④③).
- These three **X-Cross Bars** ① will form the middle X-cross members of the base unit.

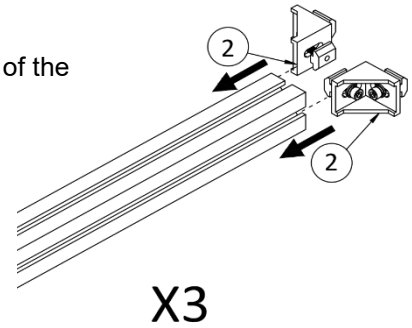

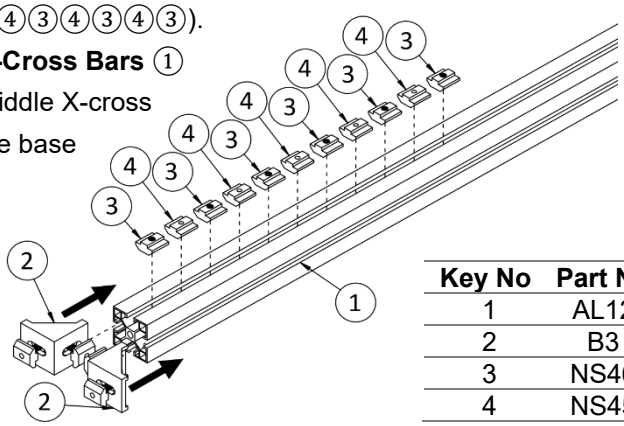

Key No	Part No	Model	Quantity
1	AL12	4040 Extrusion 1444 mm	3
2	B3	Corner Bracket 4040, Assemblec	12
3	NS46	40M6 T-Nut	18
4	NS45	40M5 T-Nut	15

BASE ASSEMBLY

ASSEMBLING BASE FRAME

NOTE:
IF YOUR MODEL IS ST4949F OR ST4933F WITH A STAND, DO NOT MOUNT THE FOUR ANGLE BRACKETS ④ TO THE SIDES OF THE Y-BEAMS ①. THESE BRACKETS WILL BE ATTACHED TO THE STAND BEAMS LATER IN THE "STAND ASSEMBLY" SECTION.

- Slide three assembled middle X-Cross Bars ③ onto the left and right Y-Beams ①.
- Slide four assembled Angle Brackets ④ onto the left and right Y-Beams ① (ST4949B, ST4933B only).
- Slide two assembled front and rear X-Cross Bars ② onto the left and right Y-Beams ①.
- Keep four Angle Brackets ④ loose for later adjustment.

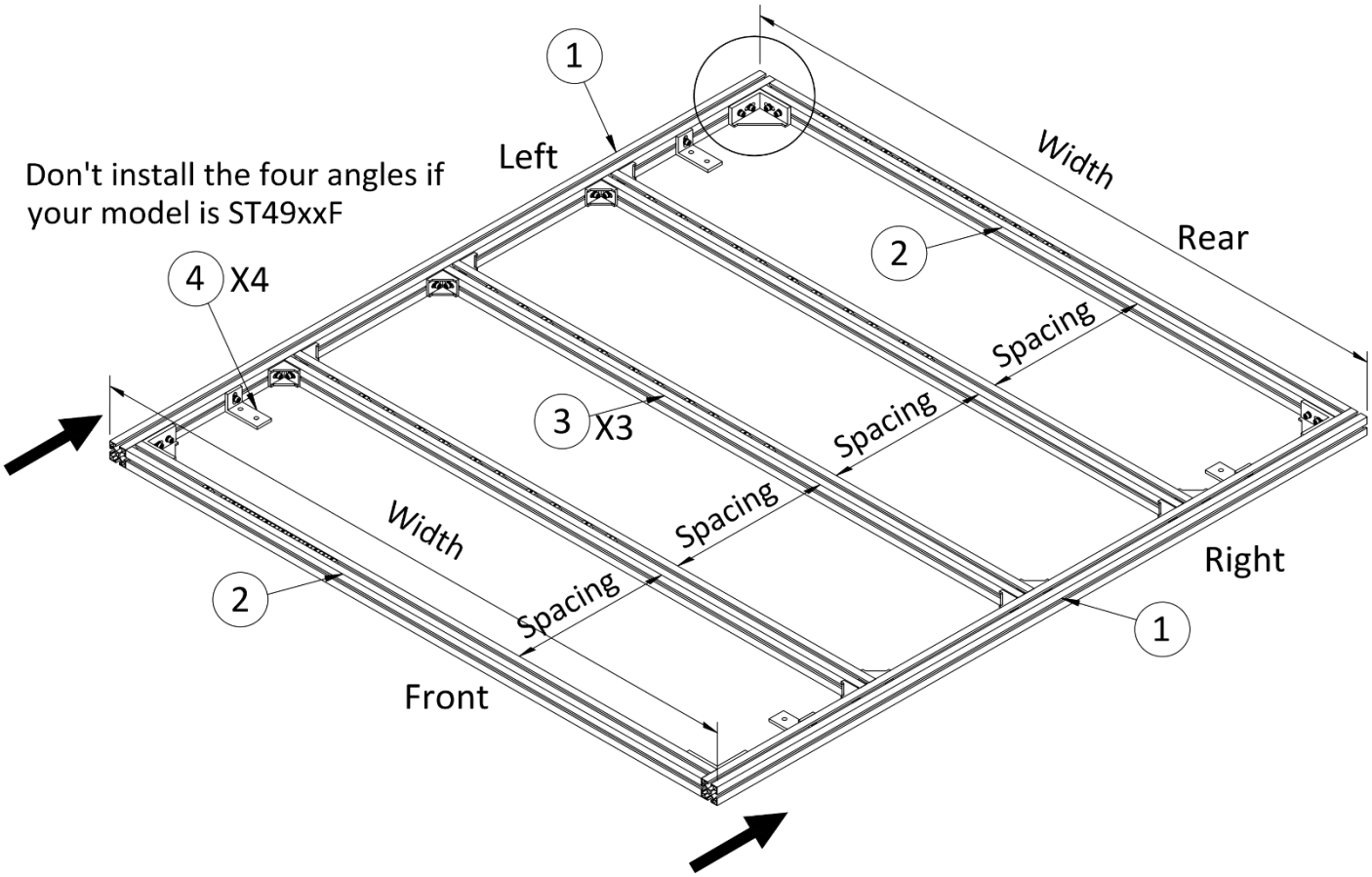

ST4949B,F (ST4933B,F)

Key No.	Part No	Model	Quantity
1	AL114 (AL113)	4040 Extrusion 1630 (1210) mm	2
2	AL12	Front and Rear X-Cross Bars, Assembled	2
3	AL12	Middle X-Cross Bars, Assembled	3
4	B2	Angle Bracket, Assembled	4

- To Align the four ends of the front and rear **X-Cross Bars** ② flush with the top and end surfaces of the **Y-Beams** ①**,** follow these steps:
  - Hand-tighten two M6x20 ⑦ screws to secure the **Corner Bracket** ⑤ to the **X-Cross Bar** ②.
  - Align the **X-Cross Bar** ② flush with the end surfaces of the **Y-Beam** ①**,** then tighten two M6x20 screws ⑥ to secure the **Corner Bracket** ④ to the **Y-Beam** ①, using an engineer's square ⑧ (not included) or straight edge for assistance if needed.
  - Loosen the two M6x20 screws ⑦, adjust the **X-Cross Bar** ② until it contacts the **Y-Beam** ① and aligns flush with its top surface, using an engineer's square ⑧ and bar clamp (not included) for assistance if needed.
  - Retighten the two M6x20 screws ⑦.

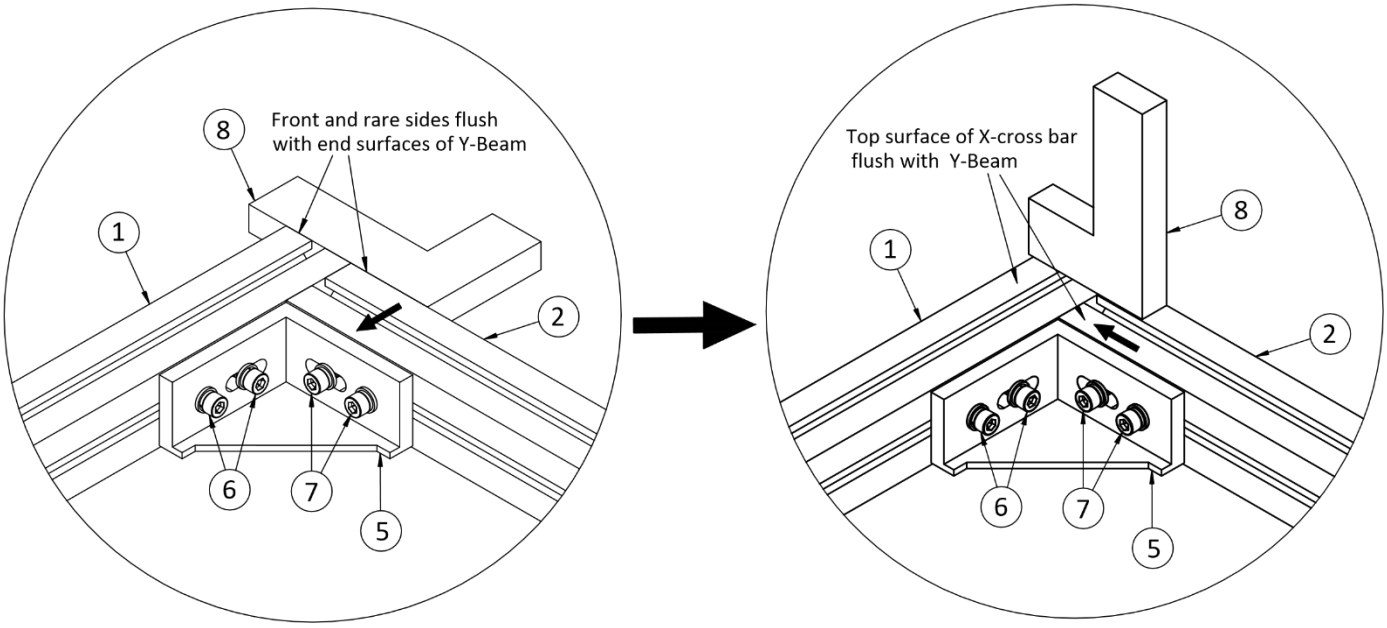

- **Confirm** that the difference between the front-end and rear-end widths is less than 0.5 mm (0.02").
- **Adjust** the spacings between **X-cross bars** ②③ to 357.5 mm (ST4949) or 252.5 mm (ST4933). This spacing is based on the specified hole distance in the MDF wasteboards as indicated in the "WASTEBOARDS" section above.
- **If** the MDF wasteboards' hole pattern is changed, reposition the X-Cross Bars to match the new hole spacing minus 40 mm**.** Be aware that the T-tracks will need new countersunk holes, as the originals will not align**.**
- **Fully tighten** all screws to secure the three middle **X-Cross Bars** ③, ensuring their top surfaces are flush with the **Y-Beams** ①.

BASE ASSEMBLY

MOUNTING BASE FRAME ONTO BENCH TOP

NOTE:
FOR ST4949F AND ST4933F MODELS WITH A STAND, SKIP NEXT TWO SECTION, COMPLETE THE "STAND ASSEMBLY" SECTION, THEN PROCEED TO THE "ASSEMBLING WASTEBOARDS ONTO BASE FRAME" SECTION.

- The machine must be mounted to a flat, solid and well leveled tabletop (not included) with rigid support.
- The recommended tabletop height is 787 mm (31") or a height that fits your preference.
- Minimum size of tabletop is 1676 mm (66") (width) X 1744 mm (68.66") (depth) for ST4949 or 1676 mm (66") (width) X 1324 mm (52.13) (depth) for ST4933. This provides the necessary clearance between the base frame and edge of the table, as shown in the diagram.
- Leave at least 500 mm (20") of clearance around the table for easy access.
- Place the base frame on the level tabletop.
- Adjust the four **Angle Brackets** ① to level the top surface of the base. Shim the bottom of the base if needed.
- Fully tighten four **M6x20 Screw Sets** ② to secure four angle brackets to the base frame.
- Secure four angle brackets to the tabletop using four **M8x25 Tapping Screws** ③.

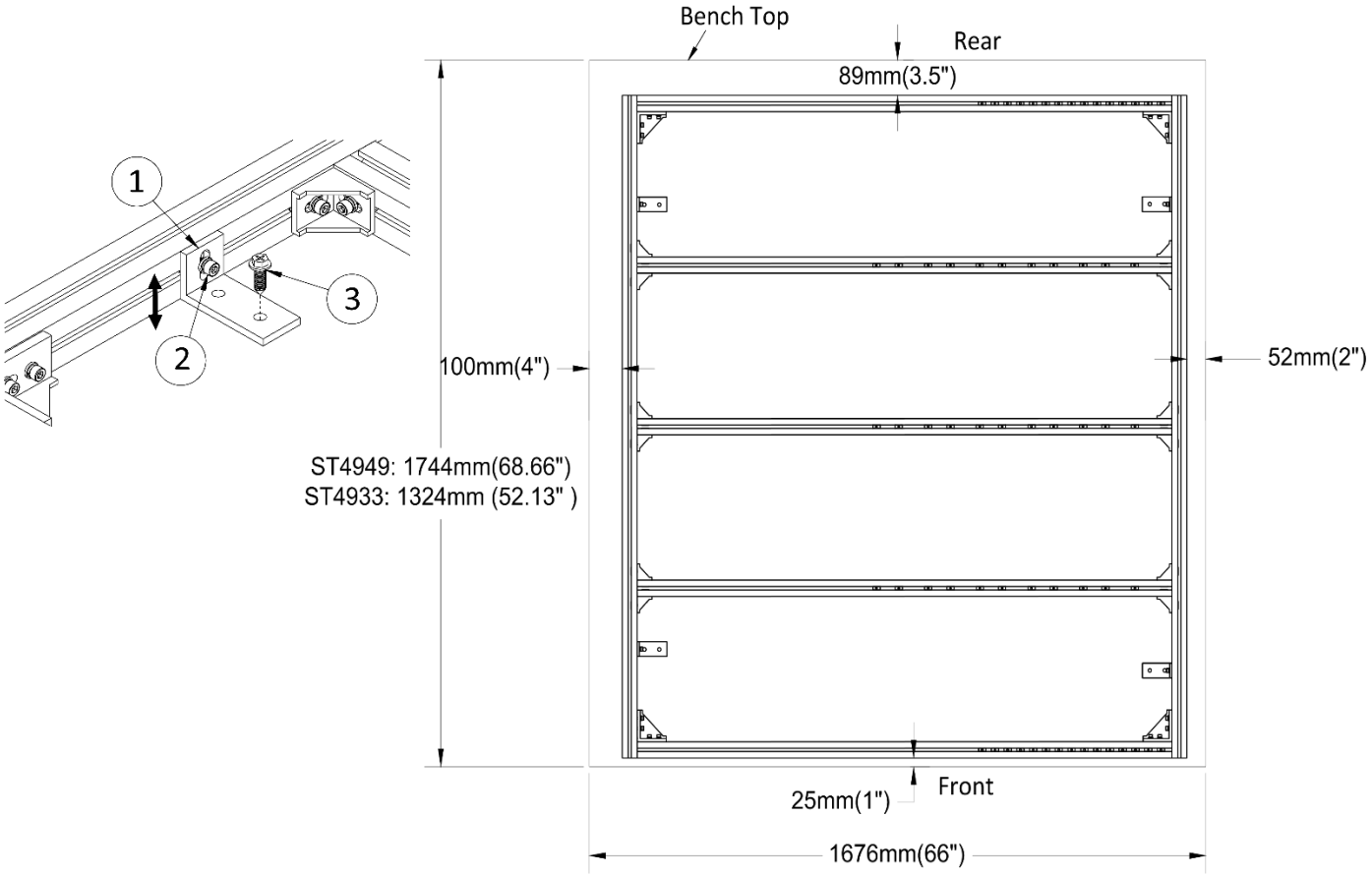

INSTALLING SWITCH BOX

FOR ST4949B AND ST4933B WITHOUT STAND ONLY:

- Open the front cover of the switch box, secure it to the left side or front-left corner of the workbench from inside using four **M4 × 20 Galvanized Round Head Self-Tapping Screws**, then reattach and close the front cover. The power cord will connect to the controller, which is located on the left side of the machine.

ASSEMBLING WASTEBOARDS ONTO BASE FRAME

NOTE:
FOR ST4949F AND ST4933F MODELS WITH A STAND, COMPLETE THE "STAND ASSEMBLY" SECTION BEFORE PROCEEDING.

- Position two narrow MDF boards (90 mm wide) ④ on the left and right sides of the base top, along with four wider MDF boards (285 mm wide) ④ in the center, separated by five aluminum **T-Tracks**.
- Attach five aluminum **T-Tracks** ① to the **X-Cross Bars** ② of the base by threading **M5x14 Flat Head Screws** ③ into **40M5 T-Nuts** in the slots of the **X-Cross Bars**.
- Attach six MDF boards ④ to the **X-Cross Bars** of the base by threading **M6x25 Flat Head Screws** ⑤ into **40M6 T-Nuts** in the slots of the **X-Cross Bars**.
- Align all MDF boards and aluminum **T-Tracks** to ensure they do not cover the left and right **Y-Beams** or extend beyond the front and rear edges of the base.

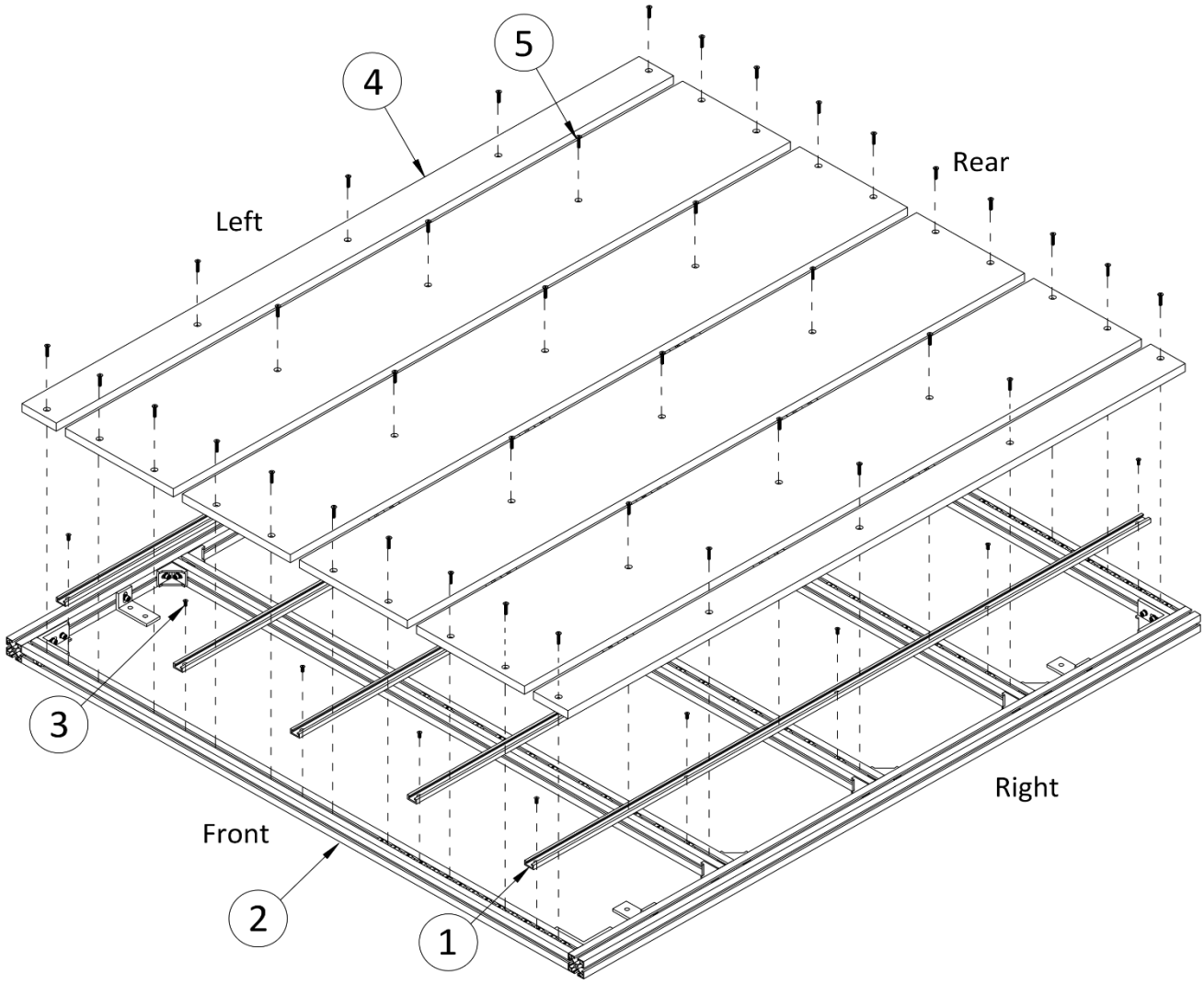

Key No.	Part Number	Model	Quantity
1	AL64, AL63	T-Track 1630 mm, 1210 mm	5
2	AL12	Front and Rear X-Cross Bars	2
3	FGD514	M5x14 Galvanized Flat Head Screw	25
4		MDF Wasteboard	6
5	FGD625	M6x25 Galvanized Flat Head Screw	38

STAND PARTS LIST

*** FOR ST4949B AND ST4933B MODELS WITHOUT A STAND, SKIP THIS SECTION.**

PARTS INCLUDED

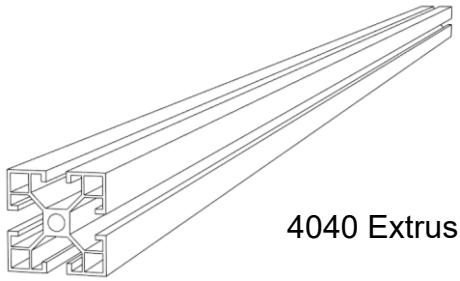

4040 Extrusion

Part Number	AL13	AL14	AL15
Length	656 mm	433 mm	320 mm
Quantity	4	4	4
Position	Leg	Cross Brace	Cross Brace

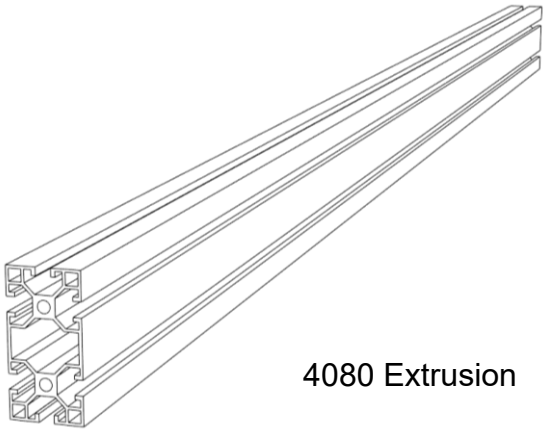

4080 Extrusion

		ST4949F	ST4933F
Part Number	AL21	AL224	AL223
Length	1524 mm	1550 mm	1130 mm
Quantity	2	2	2
Position	X-Beam	Y-Cross Bar	Y-Cross Bar

Model	Corner Bracket 4040	Joining Plate 4080	Brace Bracket	Foot Adaptor
Part Number	B3	B4	B5	B7
Quantity	16	2	16	4
Position	Cross Beams	X-Beam	Cross Brace	Leveling Foot

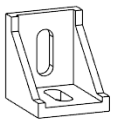
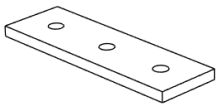

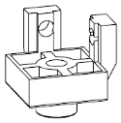

Model	Leveling Foot	End Cap	Anchor Fastener	Switch Box Bracket
Part Number	B8	EC1	B6	Y7
Quantity	4	4	8	3

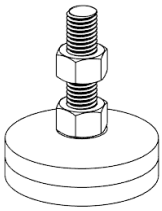
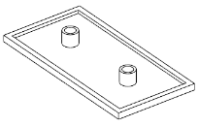

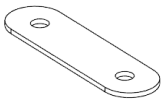

STAND PARTS LIST

Model	30M8 T-Nut	40M6 T-Nut	40M8 T-Nut	30M5 Roll-in T-Nut
Part Number	NS38	NS46	NS48	NR35
Quantity	8	46	16	3

Model	40M8 Roll-in T-Nut with Ball Spring	M4x14 Stainless Steel Pan Head Screw with Flat Washer, Lock Washer and Nut
Part Number	NB48	FSI414, FLS4, FFS41, FNS4
Quantity	8	3

Model	M5x16 Galvanized Socket Head Screw with Flat Washer and Lock Washer	M6x20 Galvanized Socket Head Screw with Lock Washer and Flat Washer
Part Number	FGA516, FLG5, FFG51	FGA620, FLG6, FFG62
Quantity	3	46

Model	M8x25 Galvanized Socket Head Screw with Lock Washer and Flat Washer	M8x20 Galvanized Socket Head Screw with Lock Washer and Flat Washer
Part Number	FGA825, FLG8, FFG81	FGA820, FLG8, FFG81
Quantity	8	32

Model	M8x30 Galvanized Socket Head Screw with Lock Washer	Switch Box
Part Number	FGA830, FLG8	SB
Quantity	8	1

STAND ASSEMBLY

FOCUS ON:

- Positioning the machine with sufficient clearance for easy access.
- Leveling the top of the base by adjusting the four leveling feet.

ASSEMBLING BRACKETS

- Assemble all brackets as shown in the diagram, using **40M6 T-nuts** ⑨, **40M8 T-nuts** ⑩, **30M8 T-nuts** ⑮, **and 40M8 Roll-in T-Nut with Ball Spring** ⑯, **Galvanized Socket Head Screw Sets (M6x20** ⑪, **M8x20** ⑫, **M8x25** ⑬, **and M8x30** ⑭**).**
- Fully tighten all **M8 X 20 Galvanized Socket Head Screw Sets** ⑫ to secure the **Brace Brackets** ⑤ to the eight **Cross Braces** ⑦⑧.
- Keep all remaining screws loosely fastened.

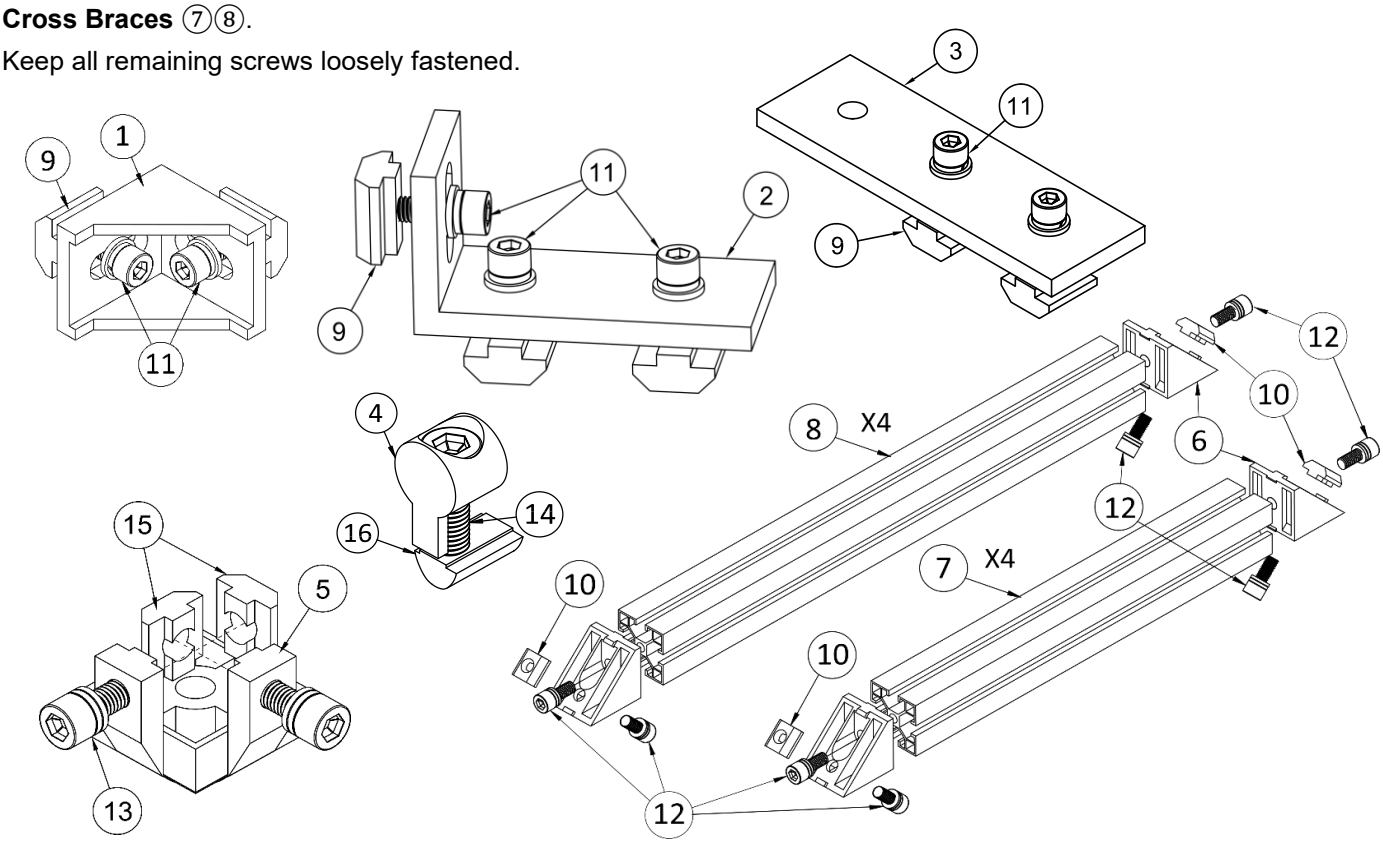

Key No	Part Number	Model	Quantity
1	B3	Corner Bracket 4040	16
2	B2	Angle Bracket	4
3	B4	Joining Plate 4080	2
4	B6	Anchor Fastener	8
5	B7	Foot Adaptor	4
6	B5	Brace Bracket	16
7	AL15	Cross Brace 320 mm	4
8	AL14	Cross Brace 433 mm	4
9	NS46	40M6 T-Nut	48
10	NS48	40M8 T-Nut	16
11	FGA620, FLG6, FFG62	M6 x 20 Galvanized Socket Head Screw with Lock Washer and Flat Washer	48
12	FGA820, FLG8, FFG81	M8 x 20 Galvanized Socket Head Screw with Lock Washer and Flat Washer	32
13	FGA825, FLG8, FFG81	M8 x 25 Galvanized Socket Head Screw with Lock Washer and Flat Washer	8
14	FGA830, FLG8	M8 x 25 Galvanized Socket Head Screw with Lock Washer	8
15	NS38	30M8 T-Nut	8
16	NB48	40M8 Roll-in T-Nut with Ball Spring	8

ATTACHING CROSS BRACES TO BASE

- Turn the assembled base frame upside down.
- Slide four assembled **433 mm Cross Braces** ① onto the left and right Y-beams of the base.
- Slide four assembled **Angle Brackets** ② onto the left and right Y-beams of the base.
- Position two **Angle Brackets** ② on the left base beam 40 mm away from each end and the other two **Angle Brackets** ② on the right base beam 60 mm away from each end.

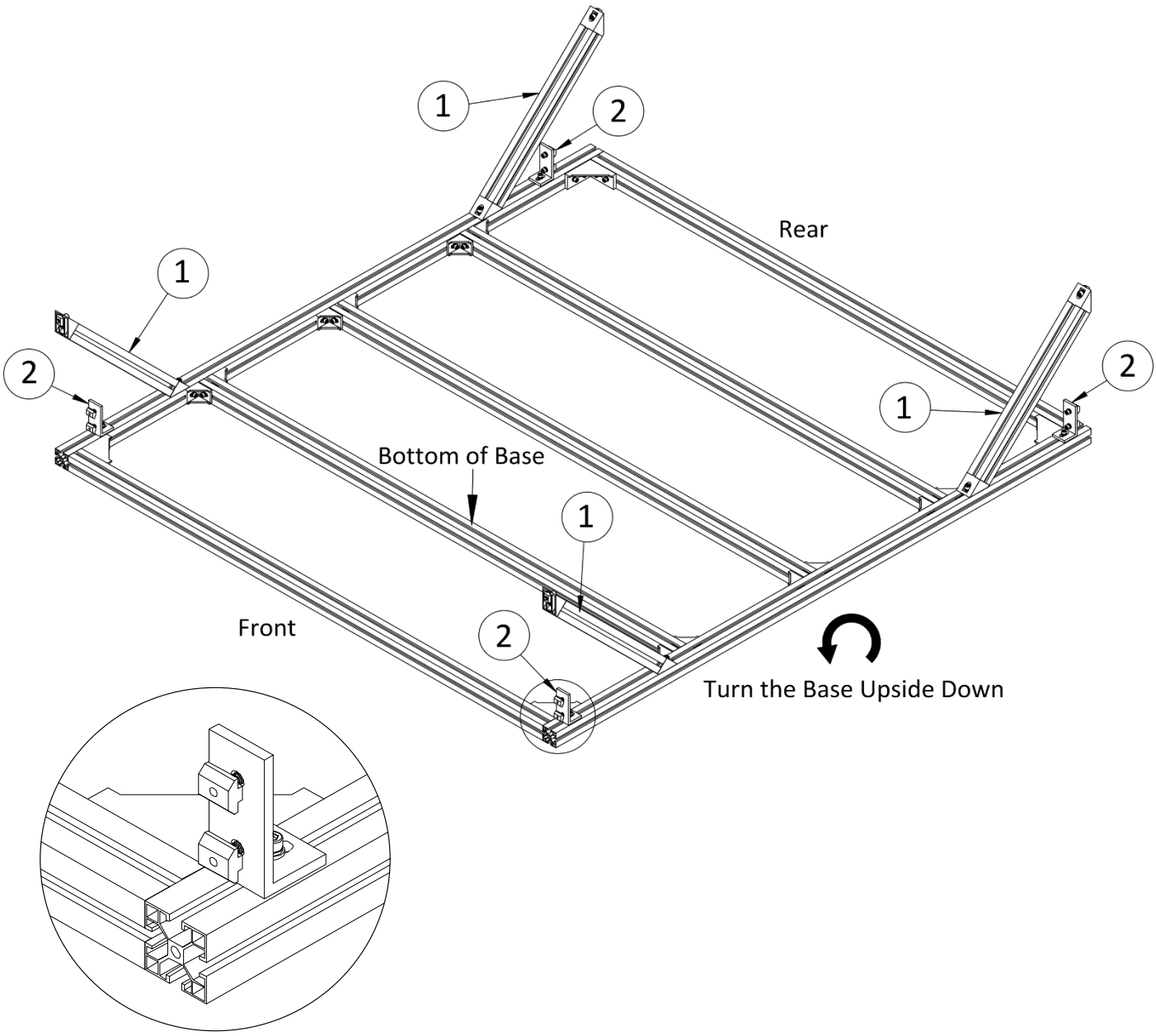

Key No.	Part Number	Model	Quantity
1	AL14	Cross Brace 433 mm	4
2	B4	Assembled angle bracket	4

ASSEMBLING REINFORCEMENT BEAMS

- Slide eight assembled **Corner Brackets 4040** ① onto the side ends of two **Y-Cross Bars** ②. These two extrusions ② will form the middle Y-cross members of the stand.
- Slide two **Joining Plates** ④ onto the two **X-Cross Bars** ②.
- Slide two **Y-Cross Bars** ② onto two **X-Cross Bars** ③ from both sides, ensuring the two **Joining Plates** ④ remain centered on the **X-Cross Bars**, as shown in the diagram. Position the two **Y-Cross Bars** ② evenly and square to the **X-Cross Ba**rs ③.
- Align all four beams so their top surfaces are flush, as indicated in the diagram.
- Hand-tighten all screws.

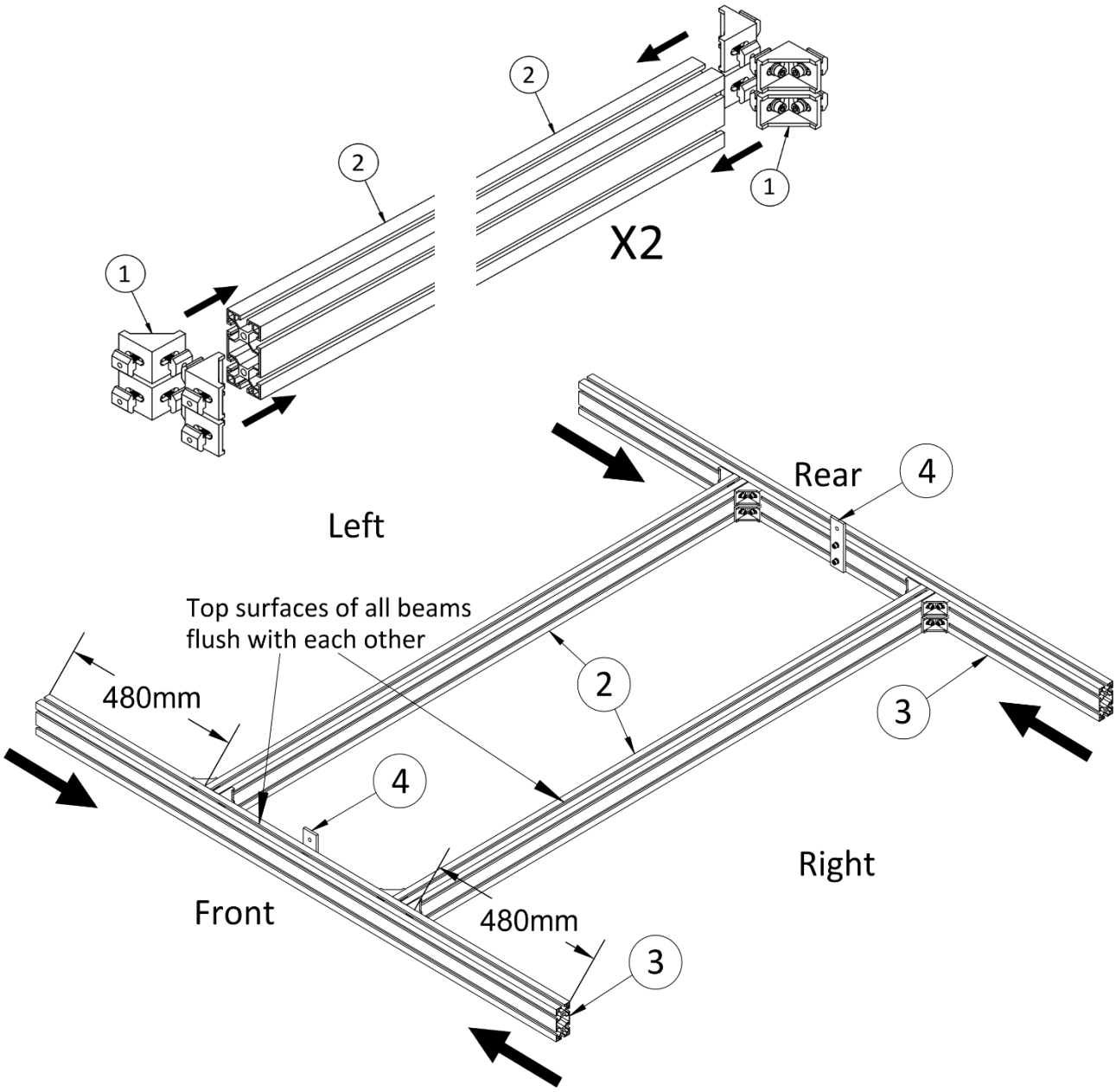

Key No.	Part Number	Model	Quantity
1	B3	Corner Bracket 4040	16
2	AL224, AL223	Y-Cross Bar, 1550 mm (ST4949F), 1130 mm (ST4933F)	2
3	AL21	X-Cross Bar, 1524 mm	2
4	B4	Assembled Joining Plate 4080	2

ATTACHING REINFORCEMENT BEAMS TO BASE

- Set the assembled reinforcement stand beam unit onto the base frame, then slide the four **Angle Brackets** ① into the ends of the front and rear **X-Cross Bars** ③.
- Align the reinforcement beams flush with the base frame unit.
- Secure the two **Joining Plates** ④ to the **40M6 T-Nuts** previously inserted into the front and rear base frame bars ⑥ using two **M6x20 Galvanized Socket Head Screw Sets** ⑤.
- Fully tighten all screws on the four **Angle Brackets** ① and the two **Joining Plates** ④ to secure the reinforcement stand beam unit to the base.
- Secure the two **Y-Cross Bars** ② to the **X-Cross Bars** ③ by fully tightening the screws on them.

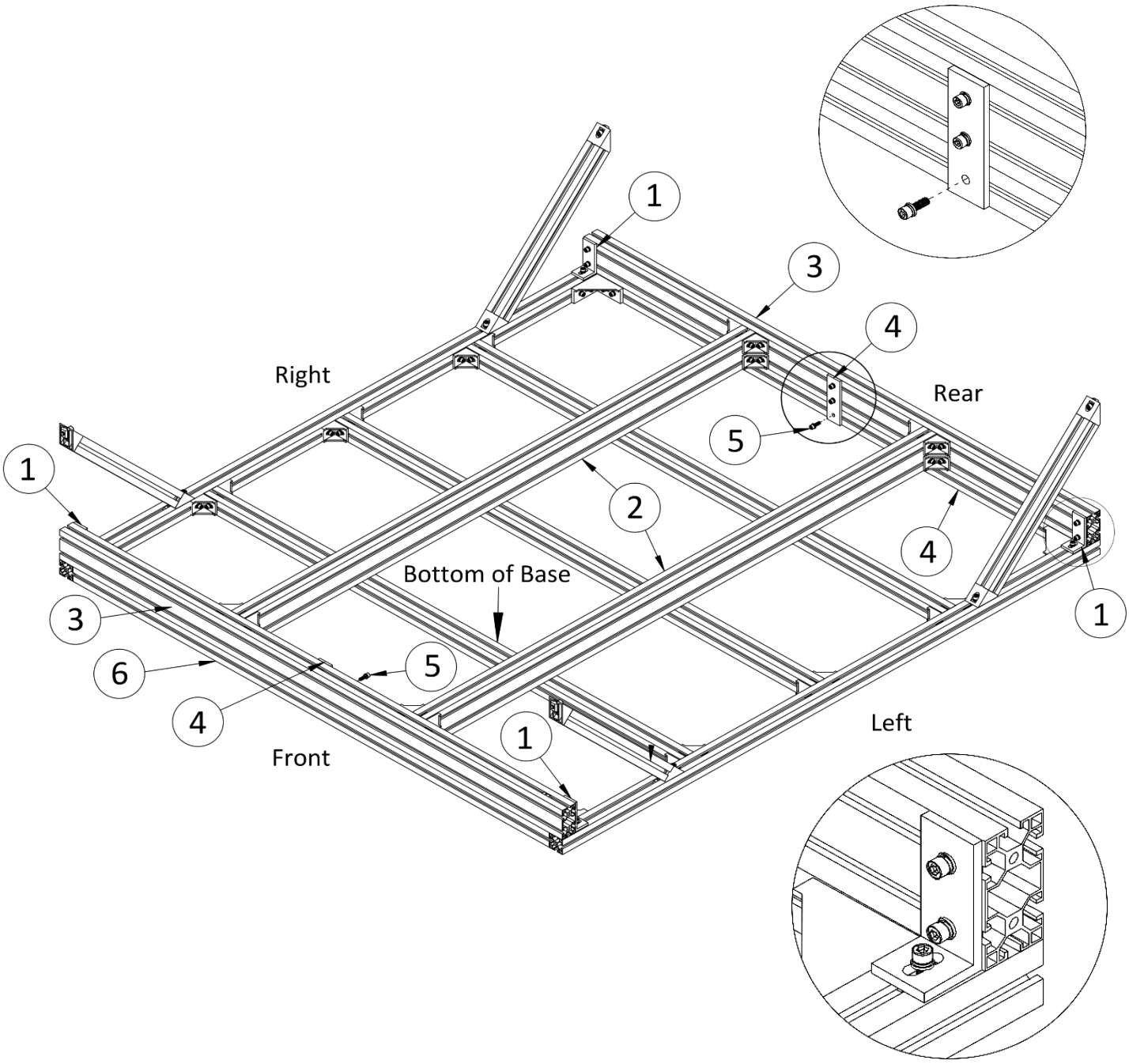

Key No	Part Number	Model	Quantity
5	FGA620, FLG6, FFG62	M6x20 Galvanized Socket Head Screw with Lock Washer and Flat Washer	2

ATTACHING CROSS BRACES AND LEGS TO STAND

- Slide four assembled **320 mm Cross Braces** ① onto the front and rear **X-Cross Bars** ② of the stand.
- Slide four **Anchor Fasteners** ③ onto the ends of the front and rear **X-Cross Bars** ②. Ensure the long ends of the T-nuts ⑥ point away from the bar's end surfaces ⑤. Install one fastener on each end.
- Position four **656 mm Legs** ④ with their pre-drilled hole ends facing downward, and orient the holes left and right to align with the **Anchor Fasteners** ③. Slide the **Legs** ④ down into place while attaching all eight **Cross Braces** ①.
- Align the **Legs** ④ flush with the front and rear **X-Cross Bars** ②. Attach all eight **Anchor Fasteners** ③ to the pre-drilled holes in the legs. Ensure the long ends of the **T-nuts** ⑥ pointing away from the bar ends ⑤ . Secure all four **Legs** ④ by fully tightening the screws in the **Anchor Fasteners** ③ with an Allen key.
- Note: If the screw heads in the **Anchor Fasteners** ③ do not fit into the pre-drilled holes in the **Legs** ④, you may remove the lock washers and flat washers to provide the necessary clearance.
- Fully tighten the screws on all eight **Cross Braces** ① to completely secure the **Legs** ④.

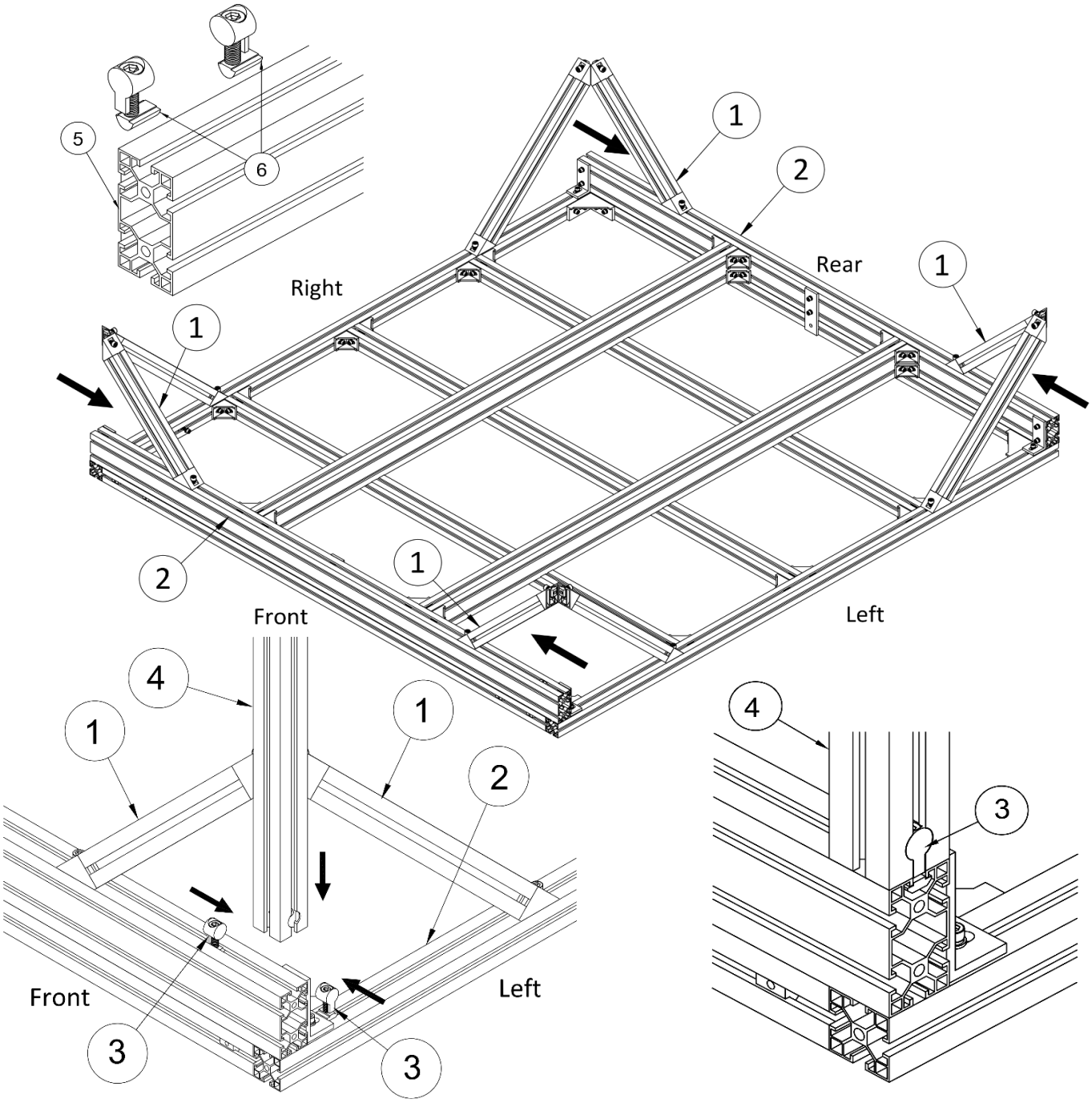

STAND ASSEMBLY

Key No.	Part Number	Model	Quantity
1	AL15	Cross Brace 320 mm	4
3	B6	Anchor Fastener	8
4	AL13	Leg, 656 mm	4

ASSEMBLING LEVELING FOOTS

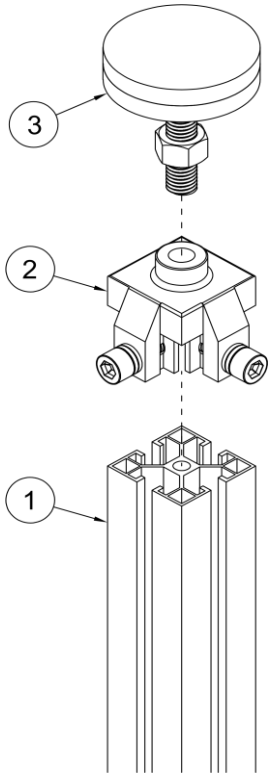

- Attach four **Foot Adapters** ② to the **Legs** ① and fully tighten all screws to secure them in place.
- Screw four **Leveling Feet** ③ into the **Foot Adapters** ②.

POSITIONING AND LEVELING BASE AND STAND

- Flip the assembled base frame and stand back to its upright position and place it in the location where it will be used.
- Ensure at least 500 mm (20”) of clearance around the machine for easy access.
- Use a 1200 mm (48”) (not included) level to level the base top by adjusting the height of the four leveling feet, then tighten the nuts on the leveling feet to secure them.
- Attach four end caps to both ends of the front and rear X-cross bars.

INSTALLING SWITCH BOX

- Open the **Switch Box** ①.
- Secure three **Switch Box Brackets** ③ to the back of the **Switch Box** ①, oriented as shown in the diagram with red emergency stop button positioned above, using three **M4x14 Stainless Steel Pan Head Screw Sets** ④ with flat washers, lock washers and nuts.
- Tighten the screws, then reinstall the front cap of the **Switch Box** ① back.

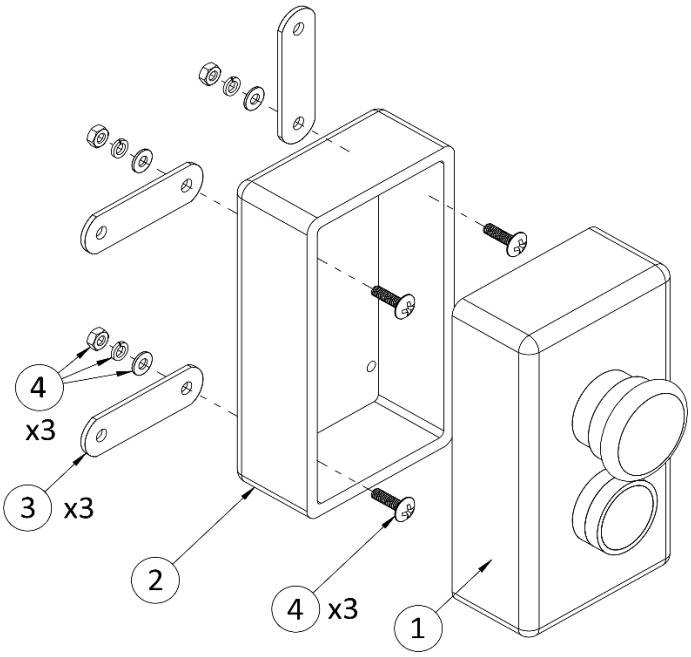

Key No.	Part Number	Model	Quantity
1	SB	Front Cap of Switch Box	1
2	SB	Bottom Case of Switch Box	1
3	Y7	Switch Box Bracket	3
4	FSI414, FLS4, FFS41, FNS4	M4x14 Stainless Steel Pan Head Screw with Flat Washer, Lock Washer and Nut	3

- The Switch Box mounts on the front-left corner of the stand.
- Insert three 30M5 Roll-in T-Nuts into the back slots of the stand at the spots indicated by arrows in the diagram.
- Secure three **Switch Box Brackets** ③ to the Roll-in T-Nuts from inside the stand, using three **M5x16 Galvanized Socket Head Screw Sets** ④ with flat washers and lock washers.

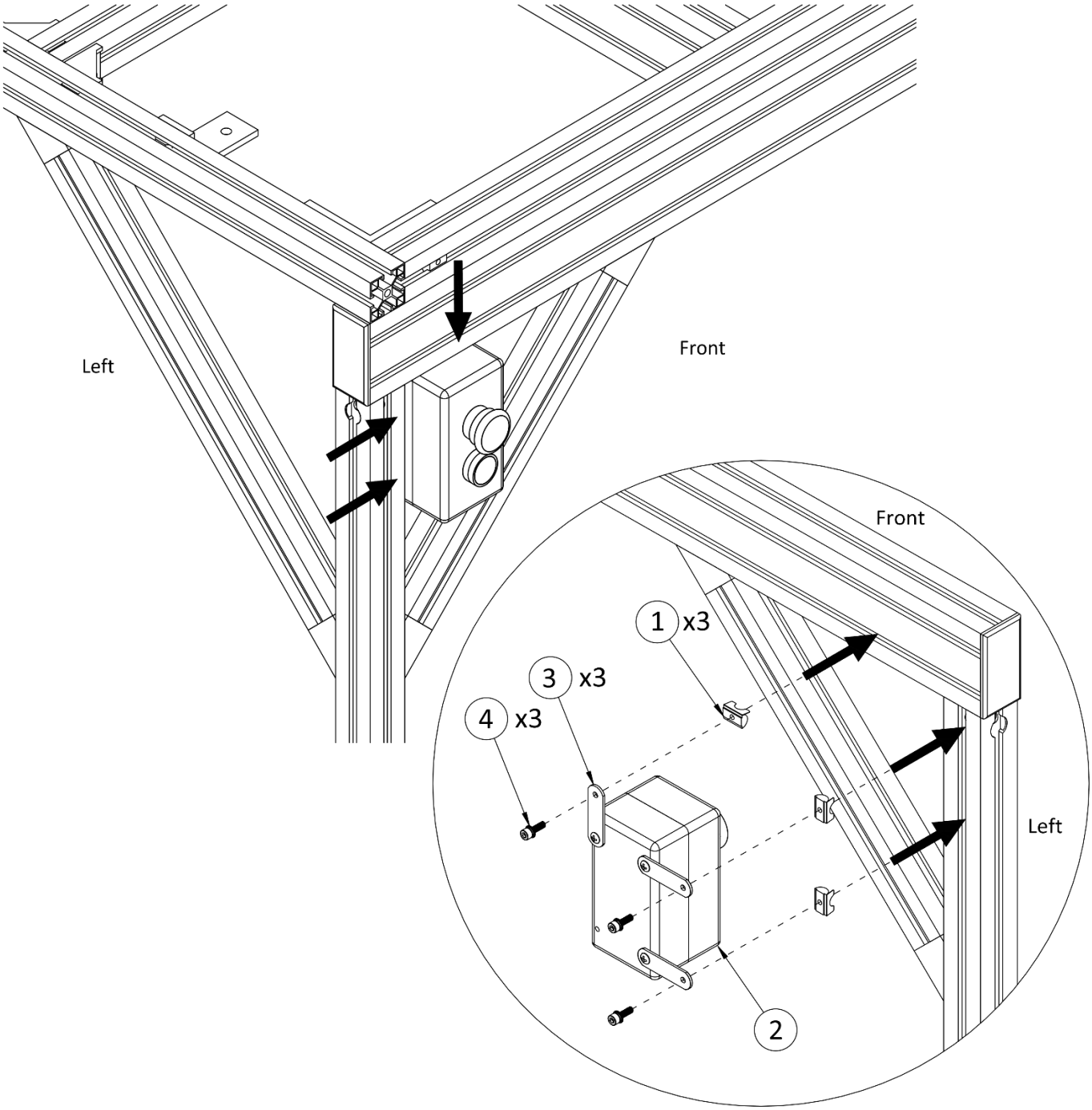

STAND ASSEMBLY

THE BASE FRAME AND STAND ARE NOW FULLY ASSEMBLED AND POSITIONED IN THE WORKING AERA. PROCEED TO SECTION “BASE ASSEMBLY – 10. ASSEMBLING WASTEBOARDS ONTO BASE FRAME”.

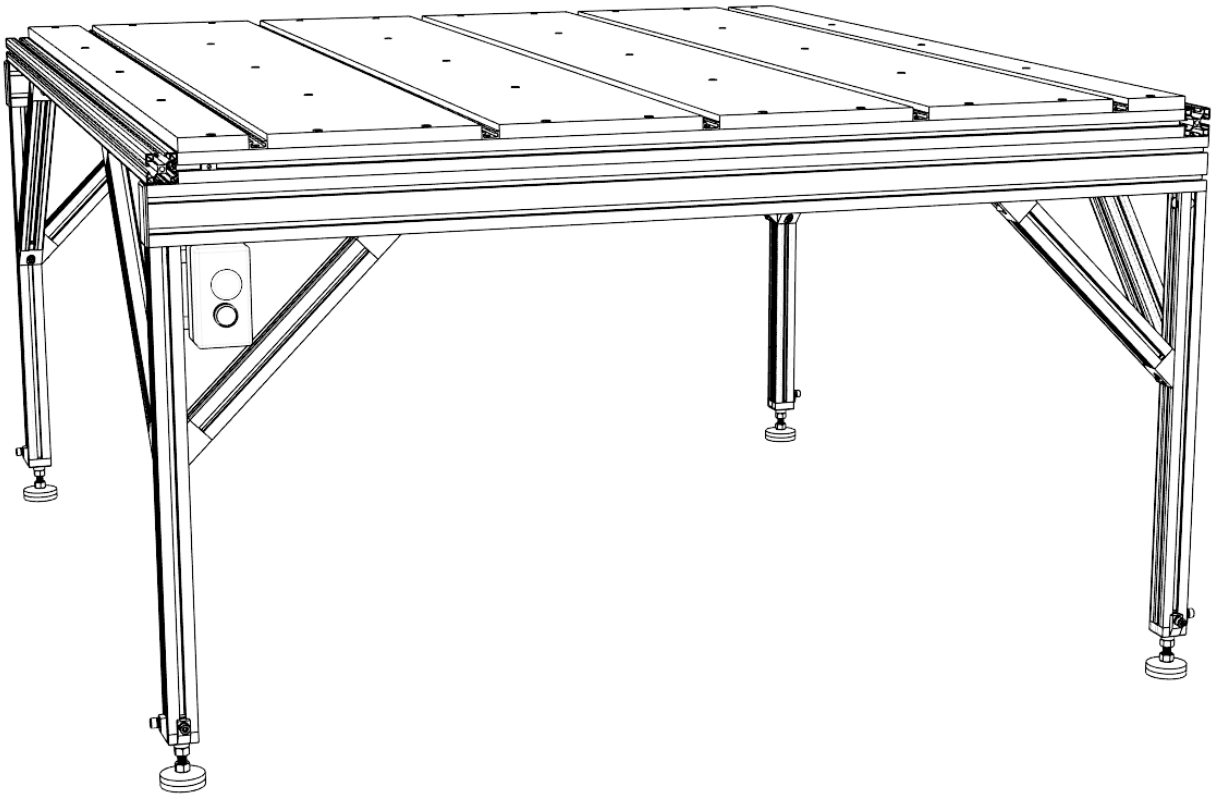

XYZ UNIT PARTS LIST

PARTS INCLUDED

	ST4949B, F	ST4933B, F	ST4949B, F	ST4933B, F
Model	Y-L Assembly	Y-L Assembly	Y-R Assembly	Y-R Assembly
Part Number	YL49	YL33	YR49	YR33
Length	1630 mm	1210 mm	1630 mm	1210 mm
Quantity	1	1	1	1

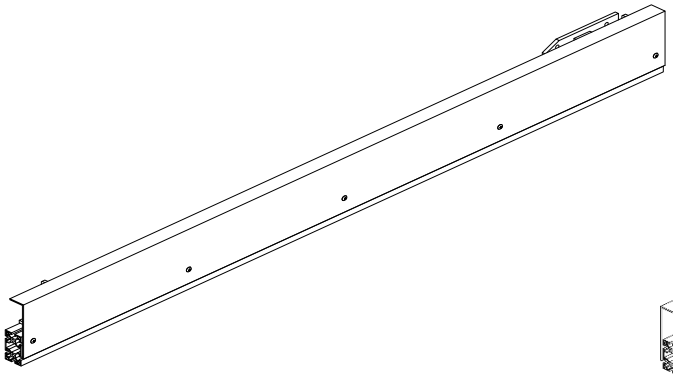

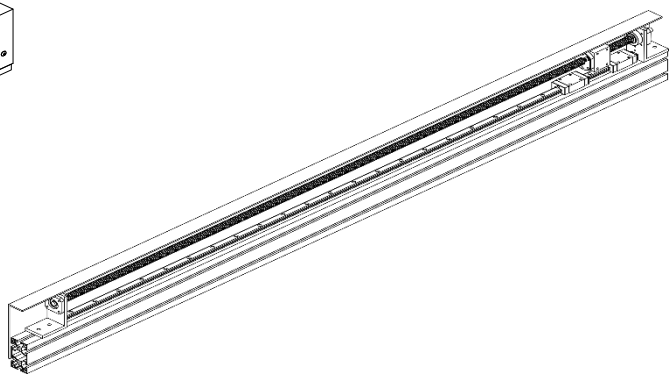

Model	X-Assembly	Z-Assembly	X-Back Plate
Part Number	X49	Z49	X7
Quantity	1	1	2

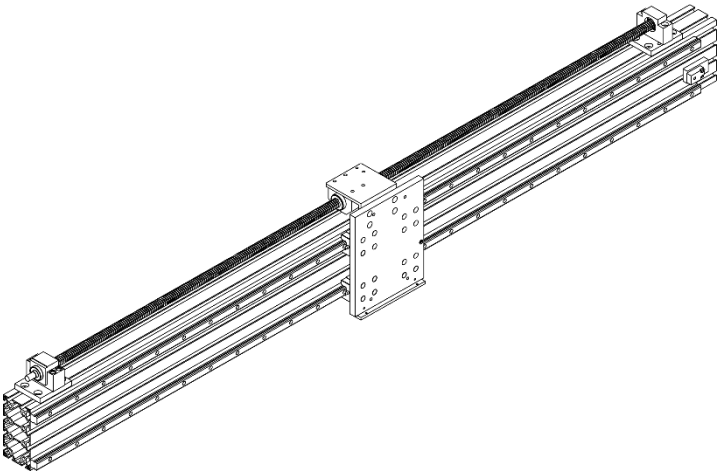

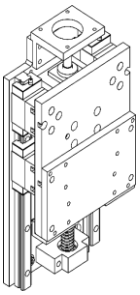

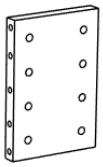

Model	Back Y-Joining Plate	Front Y-Joining Plate	Left XY-Joining Plate	Right XY-Joining Plate
Part Number	Y4	Y5	XYL	XYR
Quantity	2	2	1	1

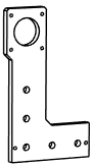

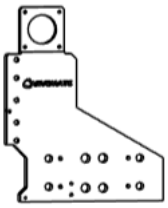

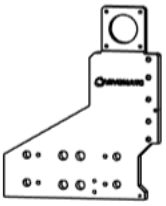

PARTS LIST

Model	30M6 T-Nut	Y Limit Sensor	M6x25 Black Socket Head Screw with Lock Washer and Flat Washer
Part Number	NS36	SW18	FBA625, FLB6, FFB61
Quantity	16	2	10

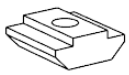
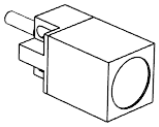
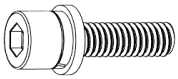

Model	M6x22 Black Socket Head Screw with Lock Washer and Flat Washer	M8x25 Black Socket Head Screw with Lock Washer and Flat Washer	M3x22 Black Socket Head Screw
Part Number	FBA622, FLB6, FFB61	FBA825, FLB8, FFB82	FBA322
Quantity	16	20	4

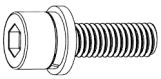
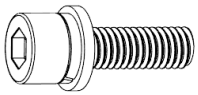

Model	M8x35 Black Socket Head Screw with Lock Washer, Flat Washer x 2 and Nut	M6x16 Black Socket Head Screw with Lock Washer and Flat Washer
Part Number	FBA835, FLB8, FFB82 x 2, FNB8	FBA616, FLB6, FFB61
Quantity	8	4

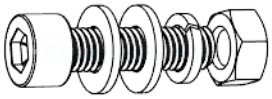
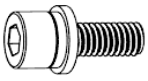

FOCUS ON:

- Aligning the left and right Y-assemblies to be parallel.
- Ensuring the X-assembly sits squarely and moves smoothly across both left and right L-shaped carriages of the Y-assemblies.

INSTALLING LIMIT SENSORS

- Remove the **L-shaped covers** ⑥ from both left and right **Y-Assemblies** ① by loosening the ten Phillips round-head Screws (eight for ST4933) by ½ to 1 full turn counterclockwise - do not remove them completely. This unlocks the drop-in T-nuts, allowing the covers to be moved off while the screws, spacers and T-nuts stay loosely attached. The covers will be reinstalled after completing cable wiring.
- Secure two **Y-Limit Sensors** ⑫ to the rear **Ball Screw Support Brackets** ⑬ (the ball screw shaft end) on both **Y-Assemblies** ① using four **M3x22 Black Socket Head Screws** ⑪. Mount the sensor with the blue cable ring to the **Y-L Assembly** ①, and the one with the green cable ring to the **Y-R Assembly** ①. Extend the sensors fully outward from the brackets ⑬.

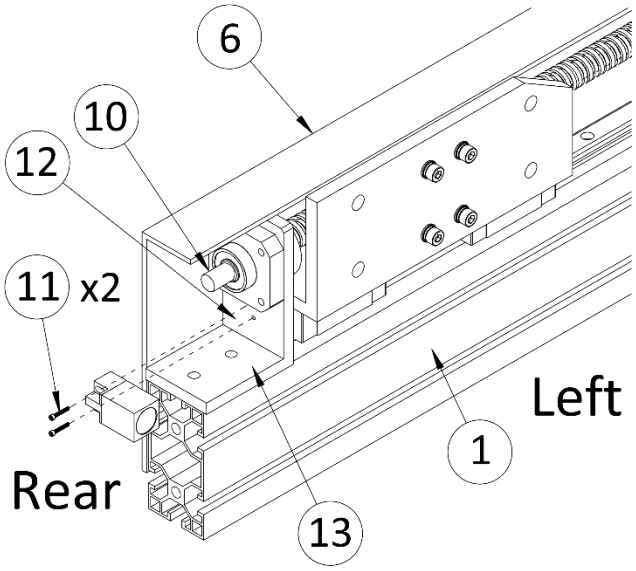

ASSEMBLING Y-ASSEMBLIES TO BASE

- Secure the front and rear **Y-Joining Plates** ③ ⑤ onto the left side of the base. For each plate, thread three **M8x25 Black Socket Head Screw Sets** ④ with flat washers and lock washers into place: two into the base's 40M8 T-Nuts, and one into the end of the left Y-Beam ②.
- Position the **Y-L Assembly** ① on top of the base's left **Y-Beam** ②. Align it perfectly flush with the beam's side and end surfaces at both the front and rear. If necessary, use an engineer's square (not included) or a straightedge to ensure precise alignment.
- Secure the front and rear **Y-Joining Plates** ③⑤ to the front and rear ends of the **Y-L Assembly** ① using four **M8x25 Black Socket Head Screw Sets** ④ with flat washers and lock washers per plate. Fully tighten all five screws on the front **Y-Joining Plates** ③ first.
- Slide a **Shaft Coupling** ⑨ onto the rear shaft of the **Ball Screw** ⑩ on the **Y-L Assembly** ①.
- Insert a **Motor** ⑧ into the **Shaft Coupling** ⑨. Adjust the position of the rear **Y-Joining Plate** ⑤ until its mounting holes align with those on the **Motor** ⑧, ensuring the motor remains perfectly aligned with the **Ball Screw** ⑩ without binding.
- **Note:** Temporarily securing the motor to the rear **Y-Joining Plate** ⑤ with four M5 screws will assist with this alignment.

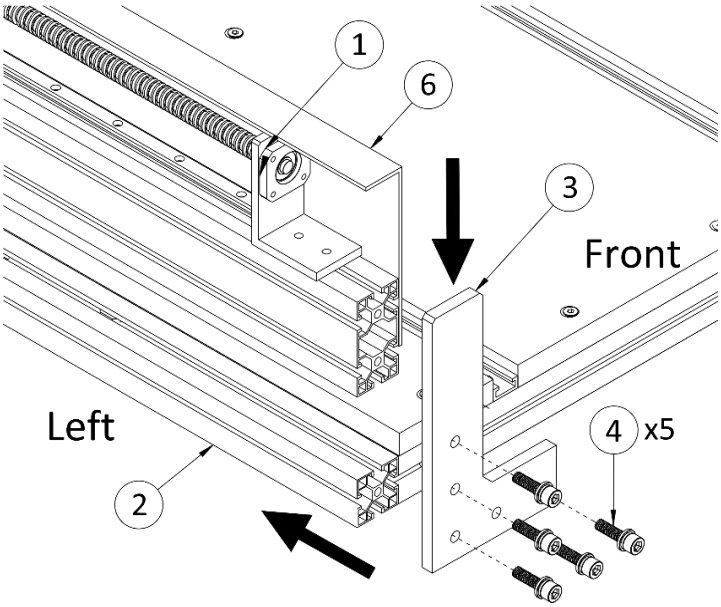

- With the motor aligned, fully tighten all five rear **M8x25 Black Socket Head Screw Sets** ④.
- Remove the **Motor** ⑧ and the **Shaft Coupling** ⑨ from the **Y-L Assembly** ①.
- Position the **Y-R Assembly** ① on top of the right side of the base.
- Attach the remaining front and rear **Y-Joining Plates** ③⑤ to the front and rear ends of the **Y-R Assembly** ① using five **M8x25 Black Socket Head Screw Sets** ④ with flat washers and lock washers per plate. Don't tighten the screws..
- Slightly shift the **Y-R Assembly** ① left or right until the distance between the left and right **L-Shaped Carriages** ⑦ is identical at both the front and rear end of the machine. Measure both ends using a straightedge or a precision tape measure to verify that the two **Y-assemblies** are perfectly parallel before proceeding.
- Repeat the same procedure to align the front and rear **Y-Joining Plates** ③⑤ for the right side. Make sure to use the **Motor** ⑧ and **Shaft Coupling** ⑨ to align the rear **Y-Joining Plate** ⑤ before final tightening.
- Fully tighten all ten **M8x25 Black Socket Head**
- **Screw Sets** ④.

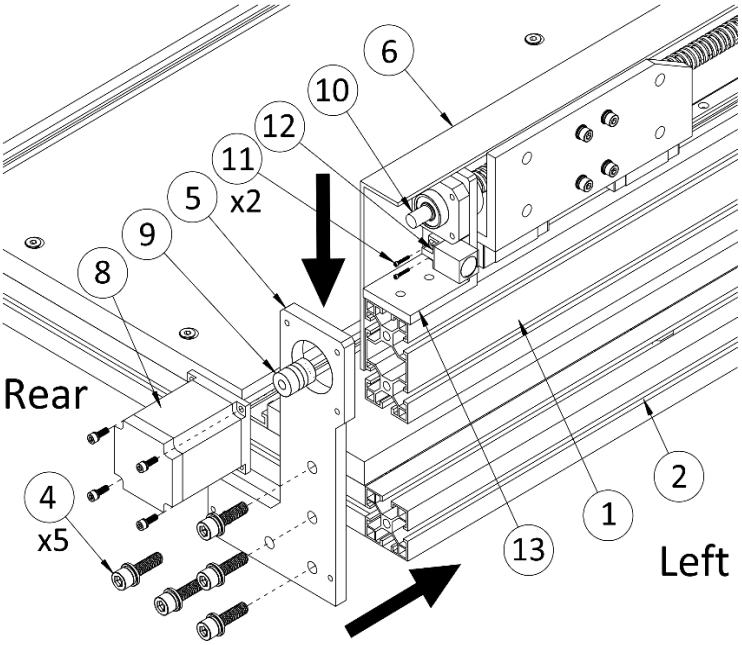

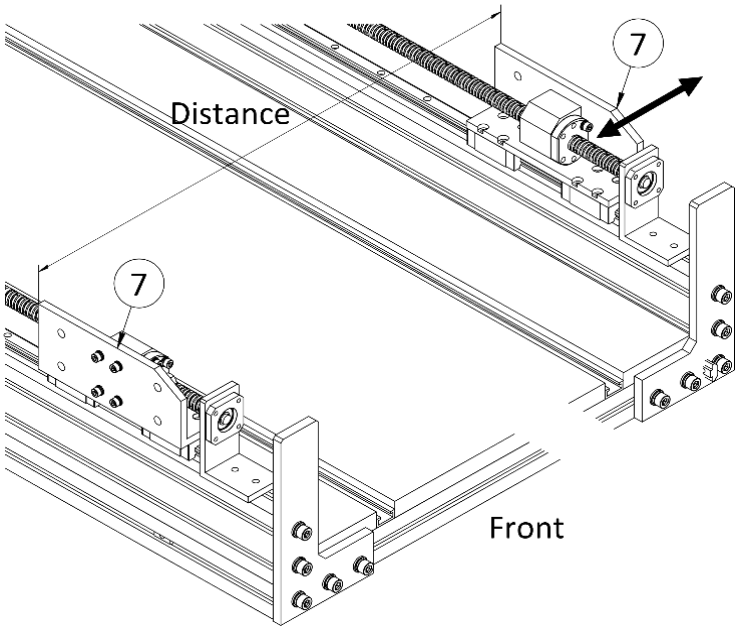

Key No.	Part Number	Model	Quantity
1	YL49, YR49, YL43, YR43	Y-L Assembly, Y-R Assembly	1
3	Y5	Front Y-Joining Plate	2
4	FBA825, FLB8, FFB82	M8 x 25 Black Socket Head Screw with Lock Washer and Flat Washer	20
5	Y4	Rear Y-Joining Plate	2
8		Motor	1
9		Shaft Coupling	1
10	FGA516	M5x16 Galvanized Socket Head Screw	4
11	FBA322	M3x22 Black Socket Head Screw	4
12	SW18	Y Limit Sensor	2

INSTALLING JOINING BRACKETS TO X-ASSEMBLY

- Place the **X-Assembly** ① on the workbench with the back side facing up and the ball screw oriented toward the operator.
- Insert sixteen **30M6 T-Nuts** ③ into the rear slots of the **X-Assembly** ① from both the left and right ends.
- Position the two **X-Back Plates** ② on the left and right back of the **X-Assembly** ①. Ensure the plates are oriented so that the side with larger margin ⑤ (compared to distance ⑥) faces toward the ball screw (top of the **X-Assembly**) and the five side screw holes on each **X-Back Plate** ② face outward of the **X-Assembly**.
- Secure the **X-Back Plates** ② to the back of the **X-Assembly** ① using sixteen **M6x22 Black Socket Head Screw Sets** ④ with lock washers and flat washers. Thread them into the **30m6 T-Nuts** ③ and tighten only enough to hold the plates in position.

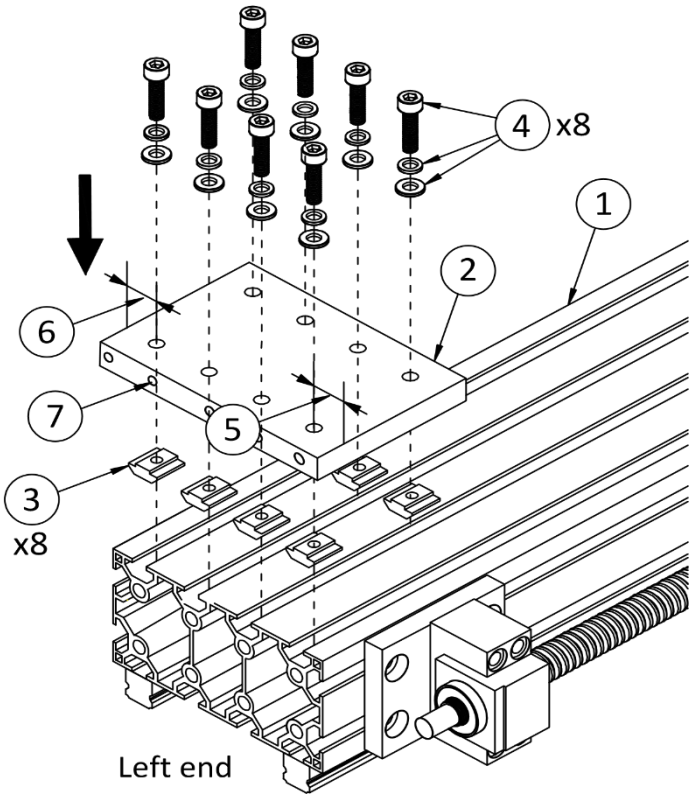

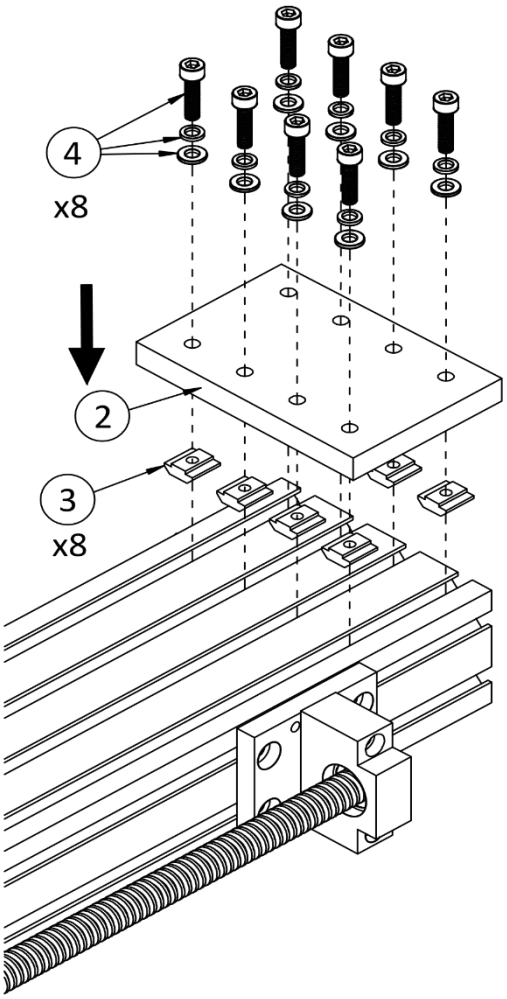

Key No.	Part Number	Model	Quantity
1	X49	X-Assembly	1
2	X7	X-Back Plate	2
3	FBA622, FLB6, FFB61	M6x22 Black Socket Head Screw with Lock Washer and Flat Washer	16
4	NS36	30M6 T-Nut	16

ASSEMBLING X-ASSEMBLY TO Y-AXIS

⚠ CAUTION:

THE X-ASSEMBLY IS HEAVY AND COULD TIP OFF THE Y-ASSEMBLIES DURING INSTALLATION. USE EXTREME CARE TO PREVENT IT FROM FALLING.

- Slide the **L-Shaped Carriages** ⑥ on both Y-Assemblies backward to the rear limit of the machine.
- Carefully place the **X-Assembly** ① onto the left and right **L-Shaped Carriages** ⑥, ensuring the linear rails on the **X-Assembly** ① face forward. Keep the **X-Assembly** ① firmly seated on the **L-Shaped Carriages** ⑥ throughout the following steps.
- The **X-Assembly** ① is about 6mm longer than the distance between the left and right **L-Shaped Carriages** ⑥. Tap the end of the **X-Assembly** ① gently with a rubber mallet (not included) until it sticks out the same amount on both sides (about 3 mm per side).
- Carefully move or Tap the **X-Assembly** ① front or back until the back surface of the **X-Back Plates** ② extends about 27 mm past the back edges of the L-shaped carriages**.**
- Loosen the left **X-Back Plate** ② and slide it outward slightly past the end of the aluminum extrusion.
- Secure the left **XY-Joining Plate** ③ to the left **X-Back Plate** ② using five **M6x25 Black Socket Head Screw Sets** ⑤ with lock washers and flat washers. Ensure the top surface of the X-Back Plate ② is flush with the shoulder of the **XY-Joining Plate** ③, then fully tighten the five screws.⑤

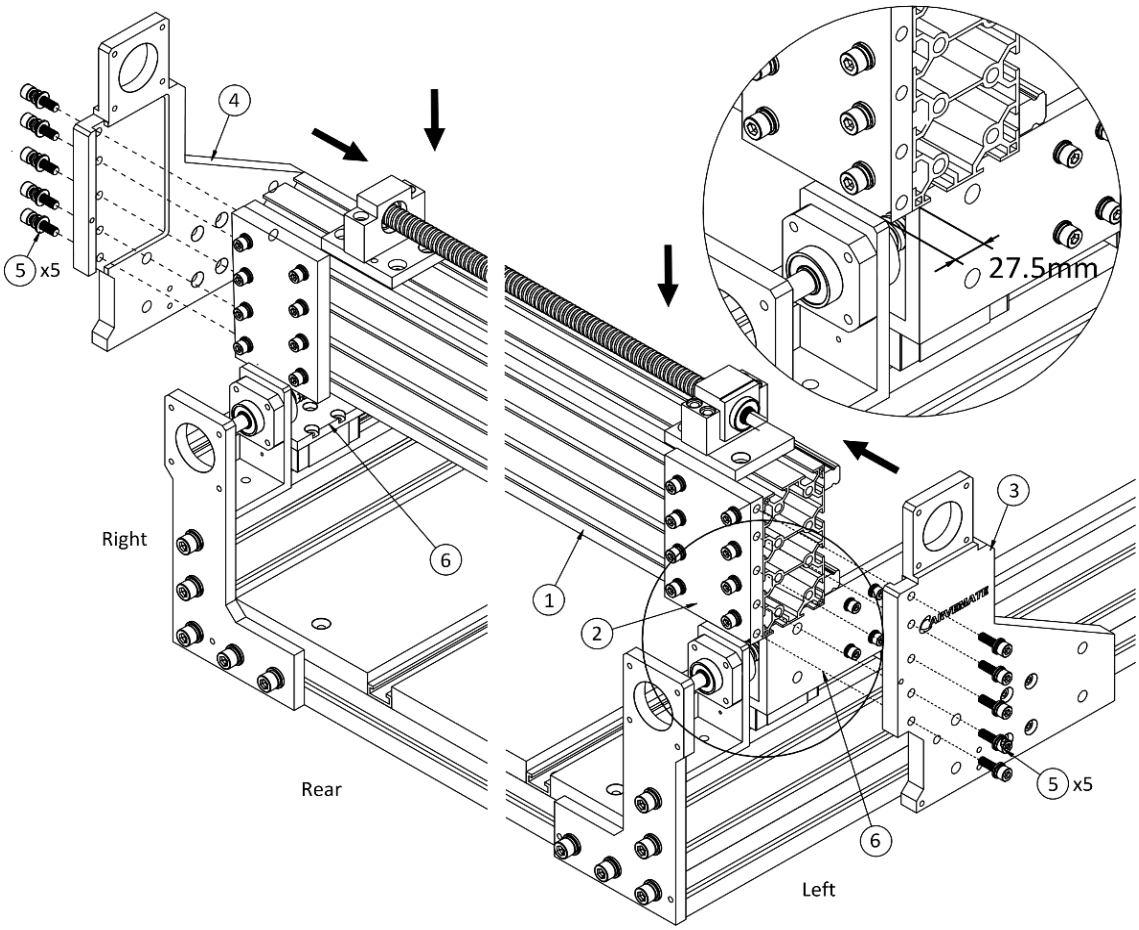

Key No.	Part Number	Model	Quantity
1	X49	X-Assembly	1
2	X7	X-Back Plate	2
3	XYL	XY-Joining Plate, Left	1
4	XYR	XY-Joining Plate, Right	1
5	FBA625, FLB6, FFB61	M6x25 Black Socket Head Screw with Lock Washer and Flat Washer	10
6		L-Shaped Carriage, Left and Right	

.

- Push the assembled **XY-Joining Plate** ③ back until it touches the left **L-shaped Carriage** ⑥.
- Gently tap the left side of the **X-Assembly** ① front or back until the back surface ⑦ of the left **XY -Joining Plate** ③ is perfectly flat (flush) with the back surface of the left **L–Shaped Carriage** ⑥.
- Fully tighten the eight **M6x22 Black Socket Head Screw Sets** on the left **X-Back Plate** ② to securely lock it to the **X-Assembly** ①.
- Repeat the same procedure to install and align the the right side of the **X-Assembly** ①.
- On the left side of the **X-Assembly** ①, if a gap remains between the **XY-Joining Plate** ③ and the **L-shaped Carriage** ⑥, carefully turn the four **M6x12 Black Set Screws** ⑨ until they just make contact with the plate to stabilize the gap.
- ***Note:*** *These set screws are only meant to support the current gap, not to change or force its size.*
- Fully tighten the four **M8x35 Black Socket Head Screw Sets** ⑧ with lock washers, two flat washers each, and nuts to secure the **XY-Joining Plate** ② to the **L-Shaped Carriage** ⑥ ensuring the gap width remains unchanged. Tighten firmly, but avoid overtightening.
- Repeat the same process for the right side of the **X-Assembly** ①.
- Slowly move the **X-Assembly** back and forth across the full travel range to confirm smooth, even movement with minimal hand force and no binding or catching.
- If binding or uneven resistance occurs, loosen the top two **M8x25 Black Socket Head Screws** on the corresponding **Y-Joining Plate**, Gently tap the end of the **Y-R Assembly** with a rubber mallet (not included) to relieve tension, then retighten the screws while verifying smooth movement.

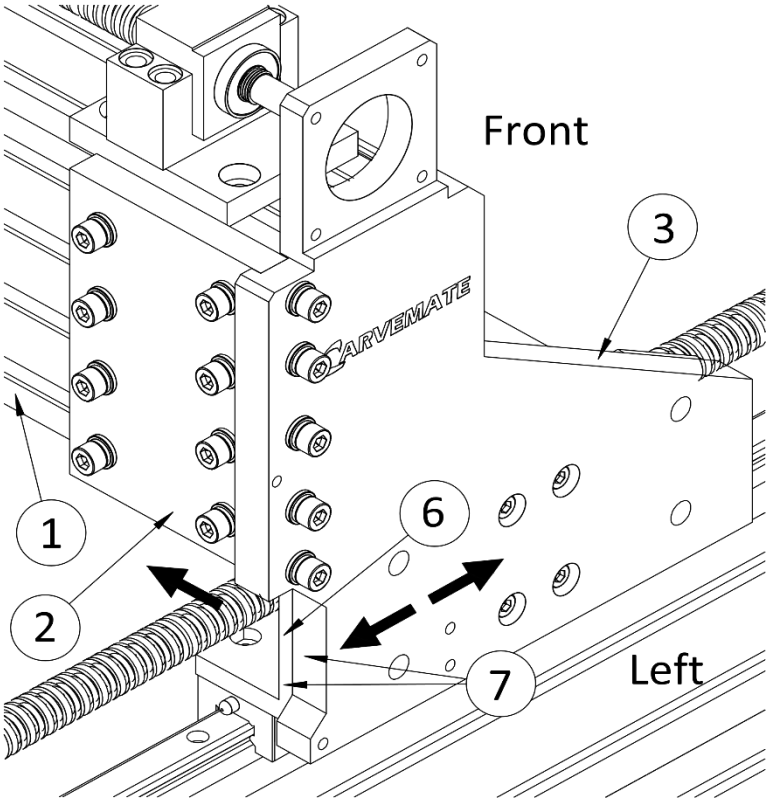

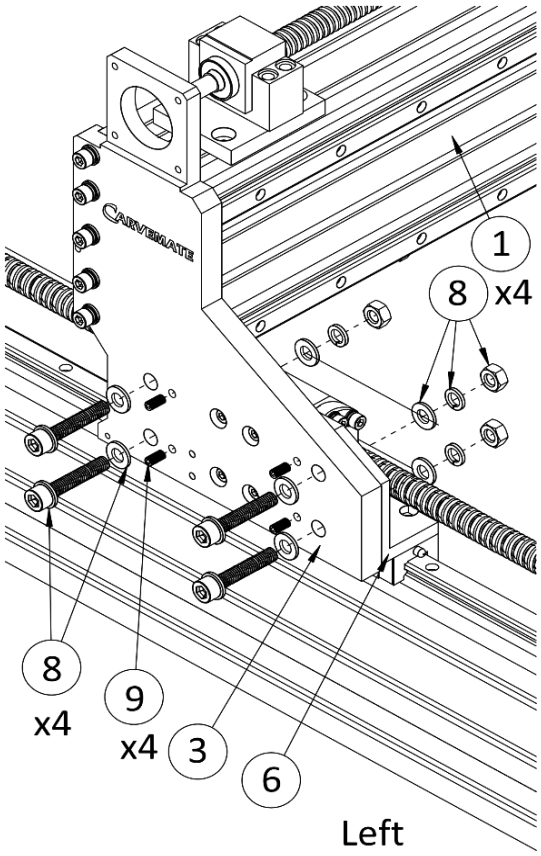

Key No	Part Number	Model	Quantity
1	X49	X-Assembly	1
2	XYL, XYR	XY-Joining Plate	2
6		L-Shaped Carriage, Left and Right	2
8	FBA835, FLB8, FFB82 x 2, FNB8	M8x35 Black Socket Head Screw with Lock Washer, Flat Washer x 2 and Nut	8
9		M6x12 Black Set Screws	8

ASSEMBLING Z-ASSEMBLY

- Attach the **Z-Assembly** ① to the **Carriage Plate** ② on the **X-Assembly** using four **M6x16 Black Socket Head Screw sets** ④ with lock washers and flat washers. To access the four mounting holes for the **M6x16 screws** on the back plate ① of the **Z-Assembly**, slide the **Carriage Plate** ③ on the **Z-Assembly** up and down as needed.
- Hand-tighten four **M6x16 Black Socket Head Screw sets** ④ just enough to secure the plates while allowing them to move freely.

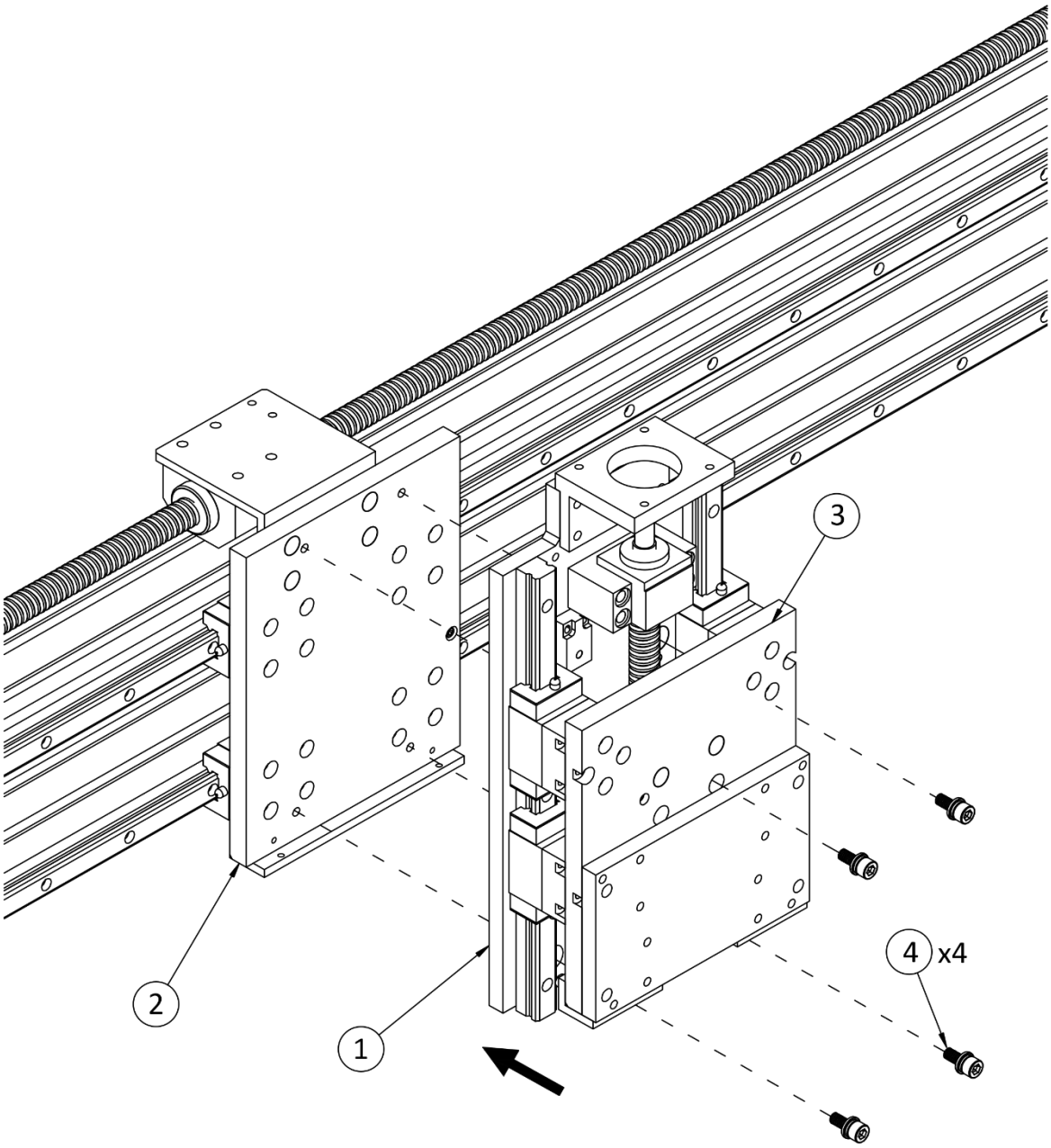

Key No	Part Number	Model	Quantity
1	Z49	Z-Assembly	1
4	FBA616, FLB6, FFB61	M6x16 Black Socket Head Screw with Lock Washer and Flat Washer	4

SQUARING Z-ASSEMBLY IN X-DIRECTION

- The carriage plates at the front of the **Z-Assembly** are not shown in the diagrams to ensure a clearer view.
- Square the **Z-Assembly**'s linear rails perpendicular to the work surface to ensure spindle travels vertically in both X and Y directions. Perform this squaring procedure as needed for routine alignment or service.
- Move Z-Assembly to the center of the work surface. Lower the linear blocks ② by turning the ball screws until the two linear blocks can reach the **Engineer's Square** ①.
- Loosen the four **M6x16 screws** ④
- Place a 250 mm (minimum) **Engineer's Square** ① (not included) on the work surface and align it to the left side ② of the two linear blocks to check for 90° alignment.
- Adjust one of the **Set Screws** ⑥ at the bottom of the **L-Shaped Bracket** ⑤ to eliminate the gap between the **Square** ① and linear blocks.
- Only adjust one **Set Screw** ⑥ to ensure at least one side of the **Z-Assembly** stays firmly in contact with the **L-Shaped Bracket** ⑤.

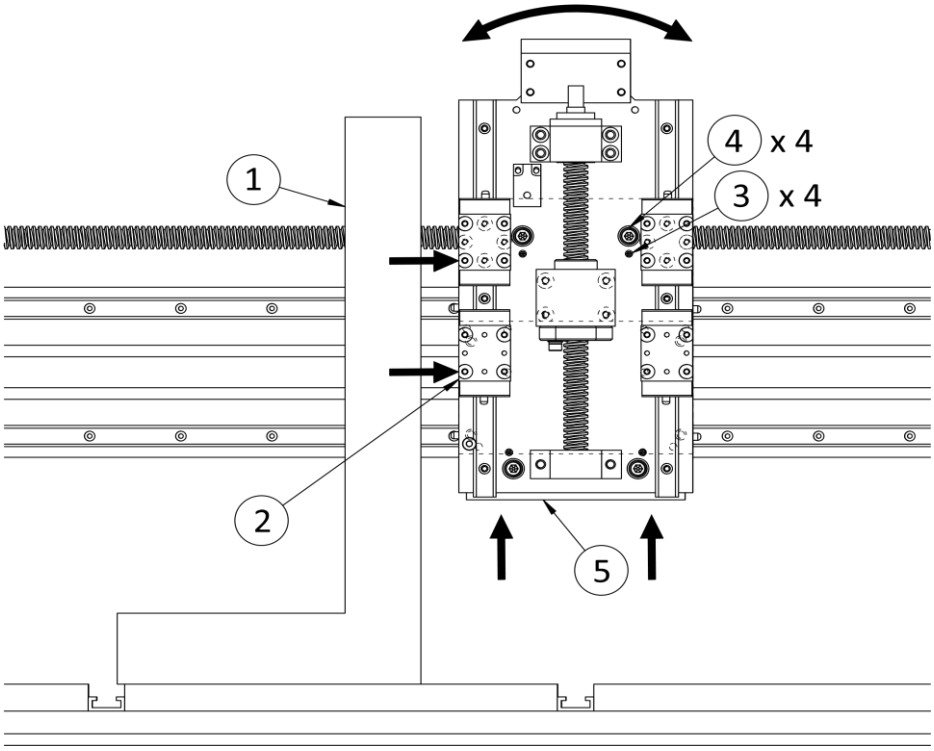

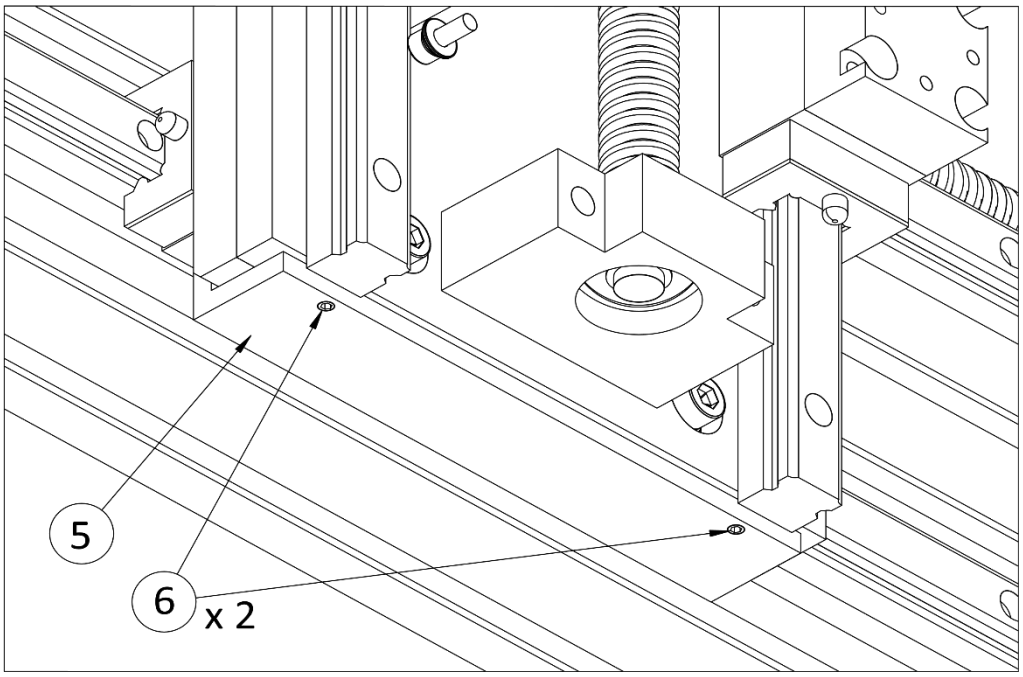

SQUARING Z-ASSEMBLY IN Y-DIRECTION

- The **Carriage Plates** ② at the front of the Z-Assembly are not shown in the diagrams to ensure a clearer view.
- Y direction alignment relies on four **M6x16 screws** ④ and four adjacent Set Screws on the **Z-Assembly back plate** ⑤. These can be accessed by sliding the **Carriage Plate** ② up and down.
- Place a 250 mm (minimum) **Engineer's Square** (not included) on the work surface and align it to the front of the **Carriage Plate** ② to check for 90° alignment.
- To eliminate the gap between the **Square** ① and the upper side of **Carriage Plate** ②, back out the top two **M6x16 screws** ④, thread in the two adjacent **Set Screws** ③ evenly**,** then insert **Metal Shims** ⑦ or folded aluminum foil between the **Z-Assembly Back Plate** ⑤ and **X-Assembly Carriage Plate** ⑥ to securely fill the gap.
- Retighten all four **M6x16 screws** ④.
- To eliminate the gap between the square and the lower side of **Carriage Plate** ②, repeat the same steps with the bottom two **M6x16 Screws** ④ and their adjacent **Set Screws** ③**.**
-

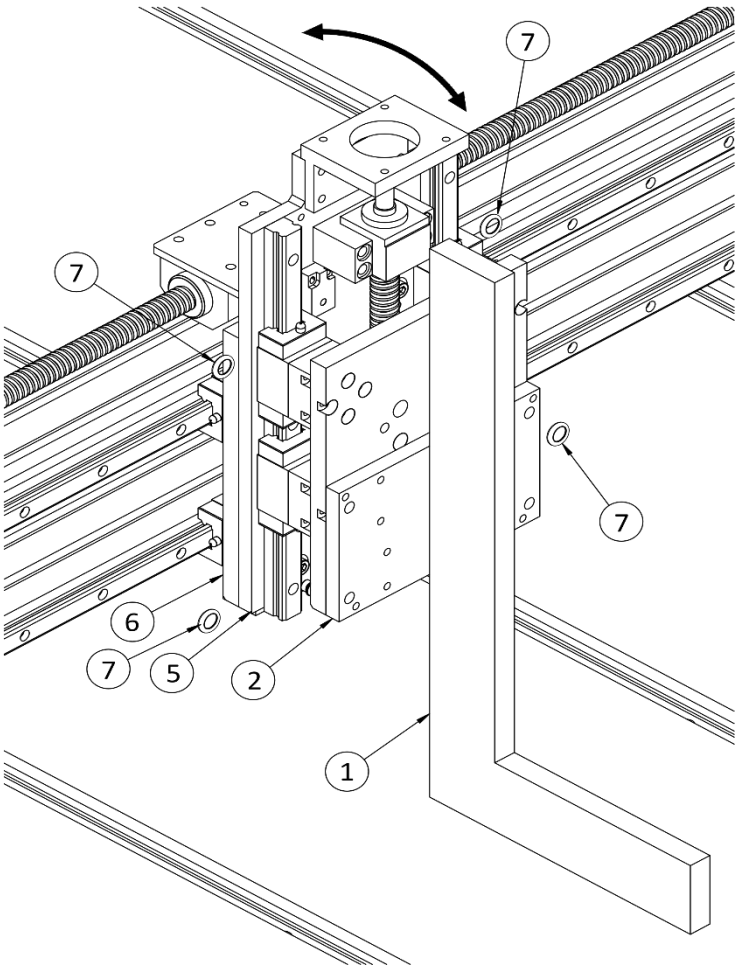

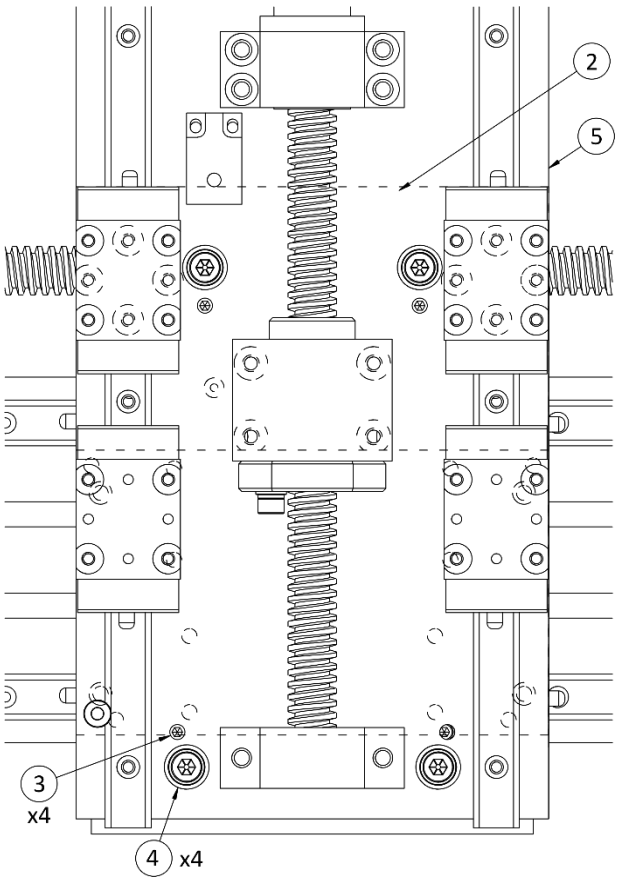

DRAG CHAIN PARTS LIST

PARTS INCLUDED

	ST4949B, F	ST4933B, F	
Model	Y-Chain Mount	Y-Chain Mount	X-Chain Mount
Part Number	AL5Y4	AL5Y3	AL5X
Quantity	700 mm	500 mm	1300 mm
	1	1	1

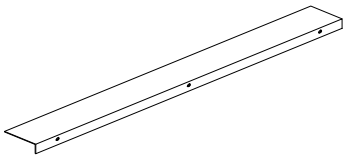

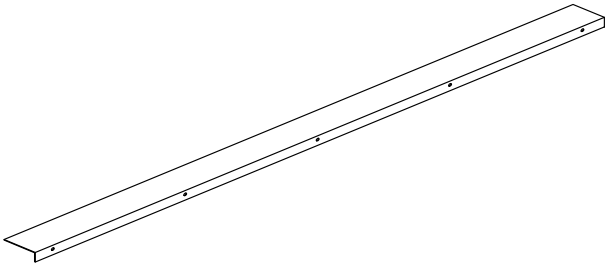

	ST4949B, F	ST4933B, F	
Model	Y-Drag Chain	Y-Drag Chain	X-Drag Chain
Part Number	DCY4	DCY3	DCX
Quantity	1 (29 Links)	1 (22 Links)	1 (49 Links)

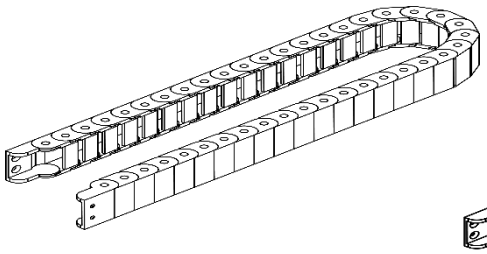

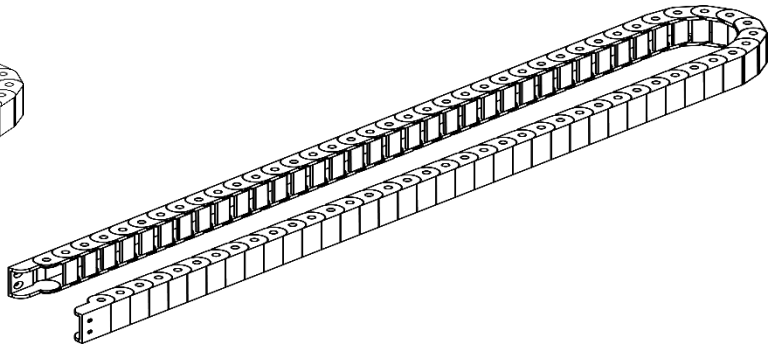

Model	X-Chain Bracket	Y-Chain Bracket	30M6 Roll-in T-nut	M5x14 Black Flat Head Screw with Flat Washer, Lock Washer and Nut
Part Number	X4	X5	NR36	FBD514, FLB5, FFB51, FNB5
Quantity	1	1	8	8

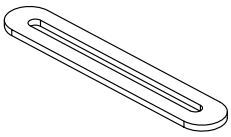

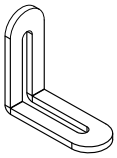

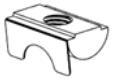

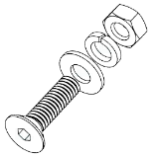

Model	M5x10 Black Socket Head Screw with Lock Washer and Flat Washer	M6x12 Galvanized Pan Head Screw with Flat Washer and Lock Washer
Part Number	FBA510, FLB5, FFB51	FGH612, FLG6, FFG61
Quantity	4	8

ASSEMBLING DRAG CHAIN MOUNTS

- Insert three **30M6 Roll-In T-Nuts** ① into the left slot ② of the left Y-Beam of the base with an Allen key, as shown in the diagram.
- Insert five **30M6 Roll-In T-Nuts** ① into the second back slot ② of the X-Assembly.
- Ensure all Roll-In T-Nuts are properly Positioned in the slots.

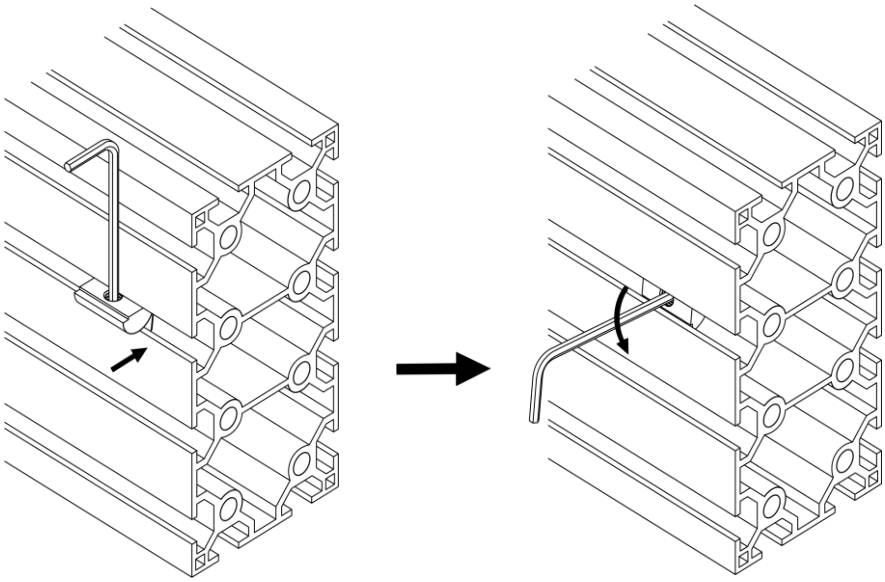

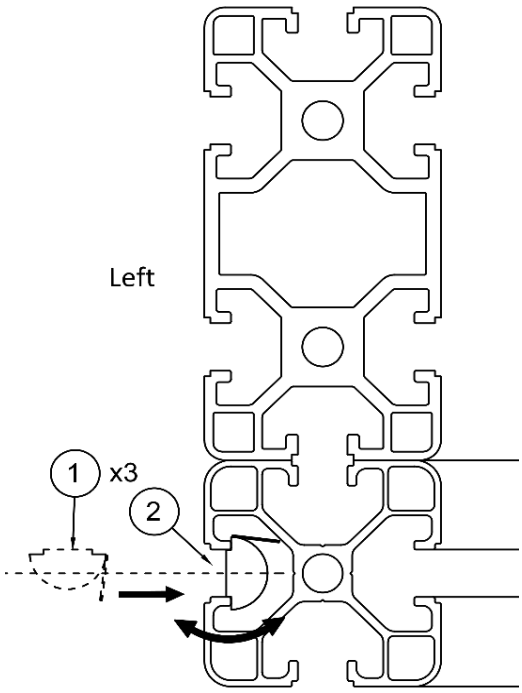

Left Y Beam of Base

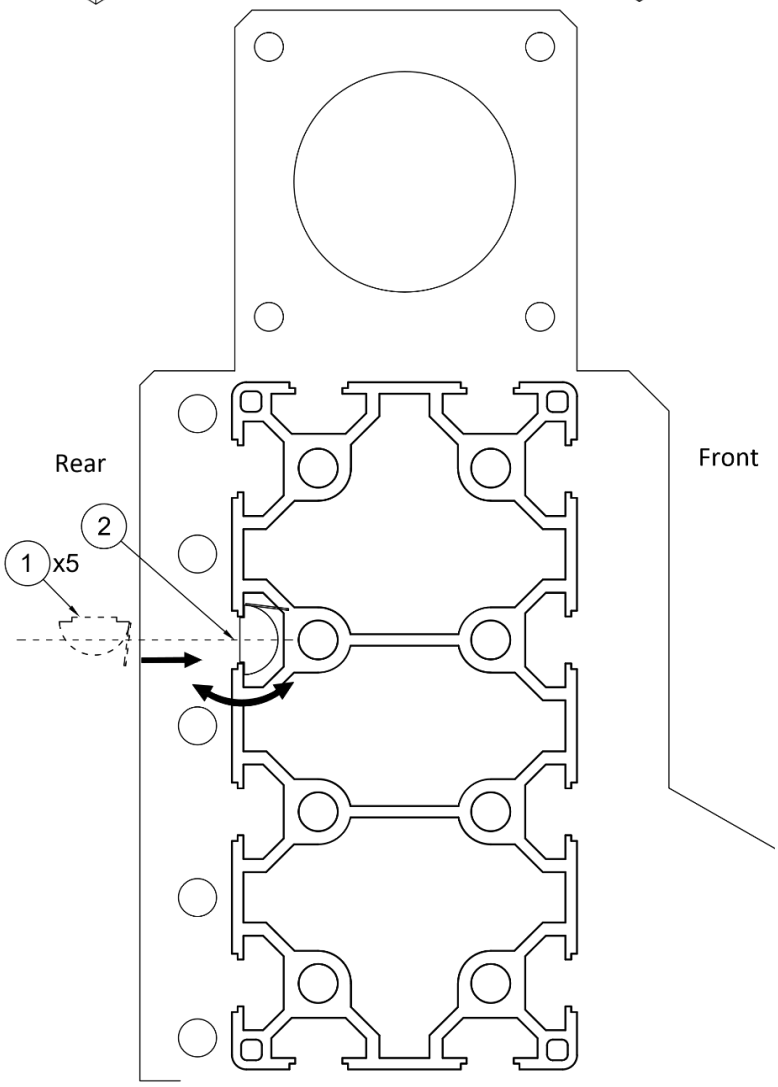

X-Assembly

DRAG CHAIN ASSEMBLY

- Attach the **Y-Chain Mount** ① to the left slot ③ of the base's left Y-Beam by threading three **M6x12 Galvanized Pan Head Screw Sets** ② with flat washers and lock washers into the three **30M6 Roll-In T-Nuts** already installed in the slot.
- Slide the **Y-Chain Mount** ① until its front edge is 180 mm from the front of Y-beam extrusion.
- Attach the **X-Chain Mount** ④ to the second back slot ⑤ of the X-Assembly by threading five **M6x12 Galvanized Pan Head Screw Sets** ② into the five **30M6 Roll-In T-Nuts** already installed in the slot.
- Slide the **X-Chain Mount** ④ until its left edge is 50 mm from the edge of the left **X-back plate**.
- Fully tighten all screws.

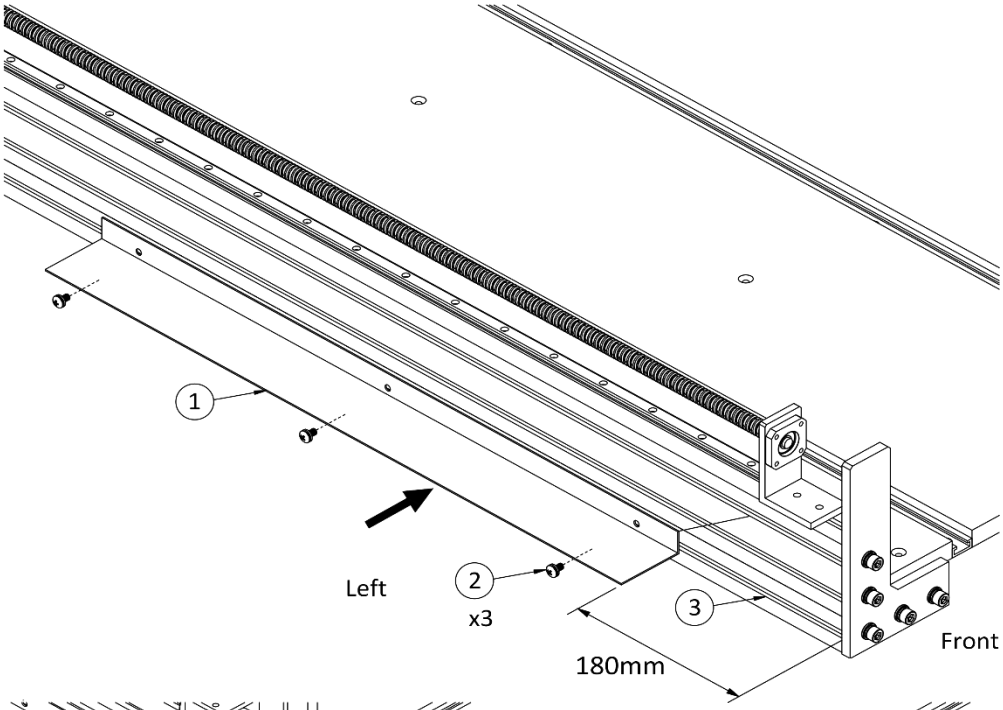

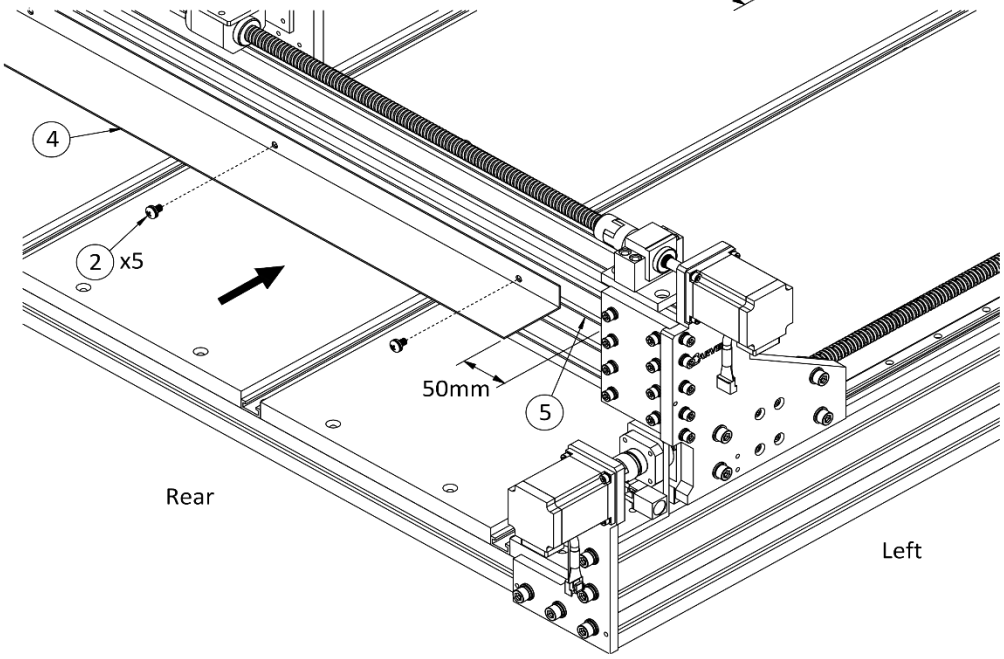

Key No	Part Number	Model	Quantity
1	AL5YL4, AL5Y3	Y-Chain Mount	1
2	FGH612, FLG6, FFG61	M6x12 Galvanized Pan Head Screw with Flat Washer and Lock Washer	8
4	AL5X	X-Chain Mount	1

DRAG CHAIN ASSEMBLY

ASSEMBLING DRAG CHAIN BRACKETS

- Attach the **Y-Chain Bracket** ④ to the left **XY-Joining Plate** ⑤ using two **M5x10 Black Socket Head Screw Sets** ② with lock washers and flat washers.
- Adjust the **Y-Chain Bracket** ④ until its bottom is 7 mm lower than the bottom of the **XY-Joining Plate** ⑤**.**
- Hand-tighten the screws ②.
- Attach the **X-Chain Bracket** ① to the **Bracket** ③ using two **M5x10 Black Socket Head Screw Sets** ② with lock washers and flat washers.
- Adjust the **X-Chain Bracket** ① until it extends 76 mm beyond the bracket ③**.**
- Hand-tighten the screws ②.

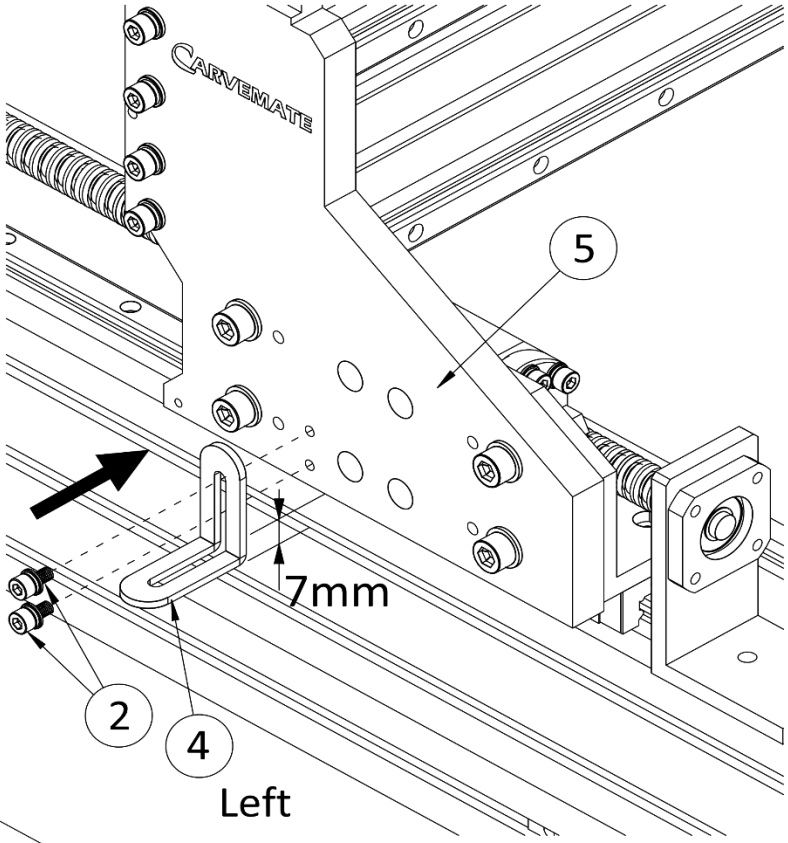

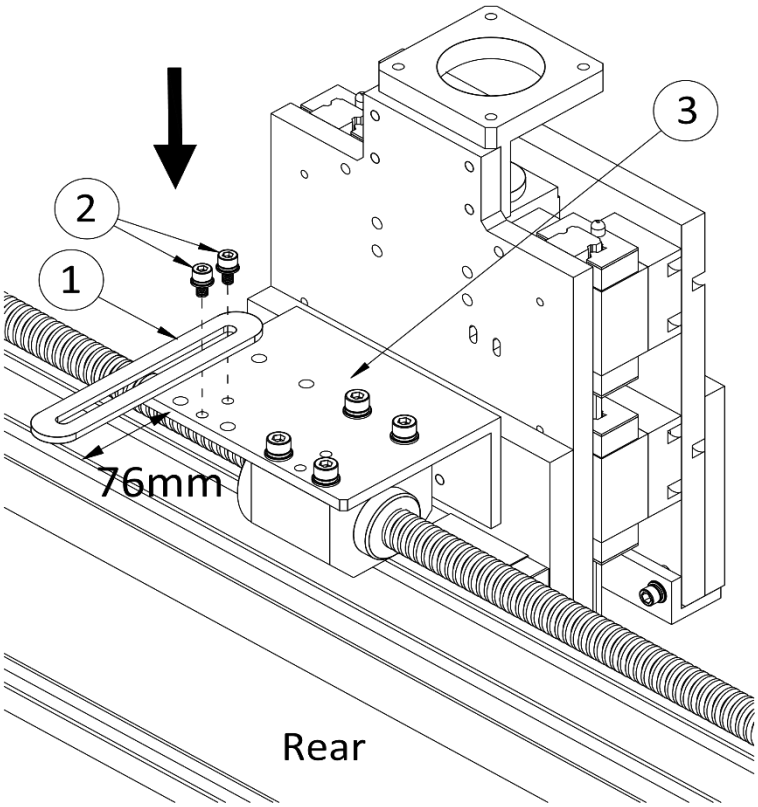

Key No	Part Number	Model	Quantity
1	X4	X-Chain Bracket	1
2	FBA510, FLB5, FFB51	M5x10 Black Socket Head Screw with Lock Washer and Flat Washer	4
4	X5	Y-Chain Bracket	1

DRAG CHAIN ASSEMBLY

ASSEMBLING Y DRAG CHAINS

- Install the **Y-Chain** ① by securing its two end connectors ② to the **Y-Chain Mount** ④ and the **Y-Chain Bracket** ⑤ using four **M5x14 Black Flat Head Screw Sets** ③ with flat Washers, lock Washers and nuts.
- Adjust the end connectors ②' positions to keep the entire drag chain untwisted
- Fully tighten all screws.

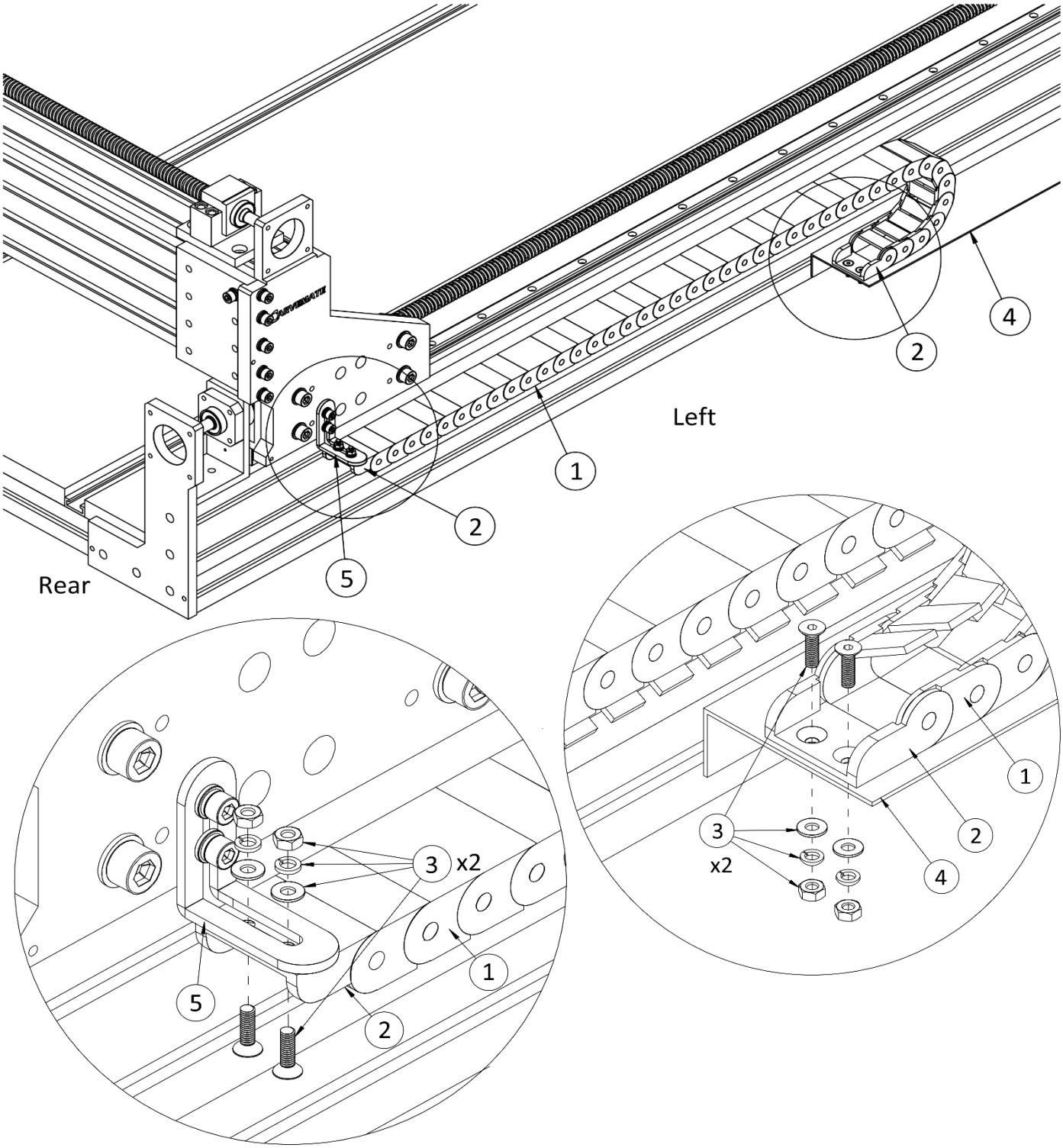

Key No	Part Number	Model	Quantity
1, 2	DCY4 (DCY3)	Y-Drag Chain	1
3	FBD514, FLB5, FFB51, FNB5	M5x14 Black Flat Head Screw with Flat Washer, Lock Washer and Nut	4

DRAG CHAIN ASSEMBLY

ASSEMBLING X DRAG CHAINS

- Install the **X-Chain** ① by securing its two end connectors ② to the **X-Chain Mount** ④ and the **X-Chain Bracket** ⑤ using four **M4x14 Black Flat Head Screw Sets** ③ with flat Washers, lock Washers and nuts.
- Adjust the end connectors②' positions to keep the entire drag chain untwisted and clear of screw heads at the rear right of the X-Assembly.
- Slide the **Z-Assembly** to the right end of the **X-Assembly**, Ensure the **X-Chain** ① clears all screw heads on the **X-Back Plate** without interference.
- Fully tighten all screws.

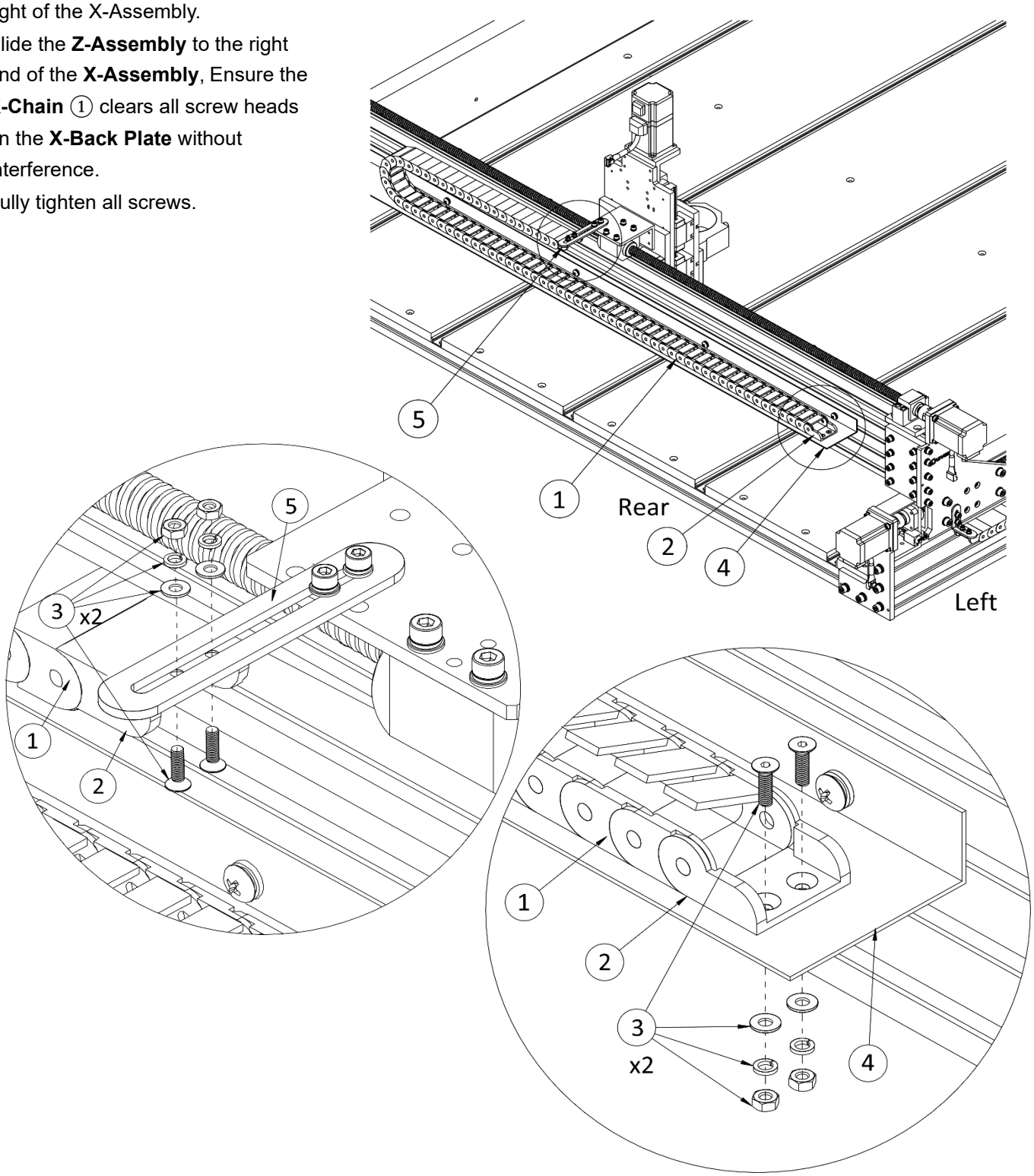

Key No	Part Number	Model	Quantity
1, 2	DCX	X-Drag Chain	1
3	FBD514, FLB5, FFB51, FNB5	M5x14 Black Flat Head Screw with Flat Washer, Lock Washer and Nut	4

ELECTRONICS PARTS LIST

PARTS INCLUDED

Model	Motor with Brake	Motor	Shaft Coupling	VFD Enclosure
Part Number	M2	M1	M4	VB15, VB22
Quantity	1	3	4	1

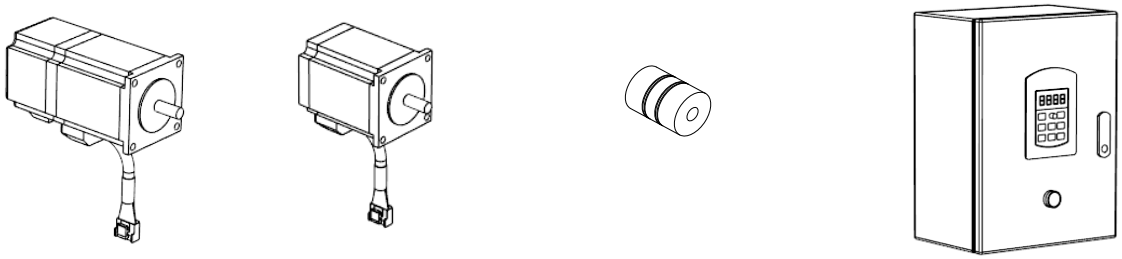

Model	Spindle Mount 80 mm	Spindle Mount 65 mm	Spindle	Motor Cable
Part Number	Z80	Z65	S115, S122	CB8X, Y, A, Z
Quantity	1	1	1	4

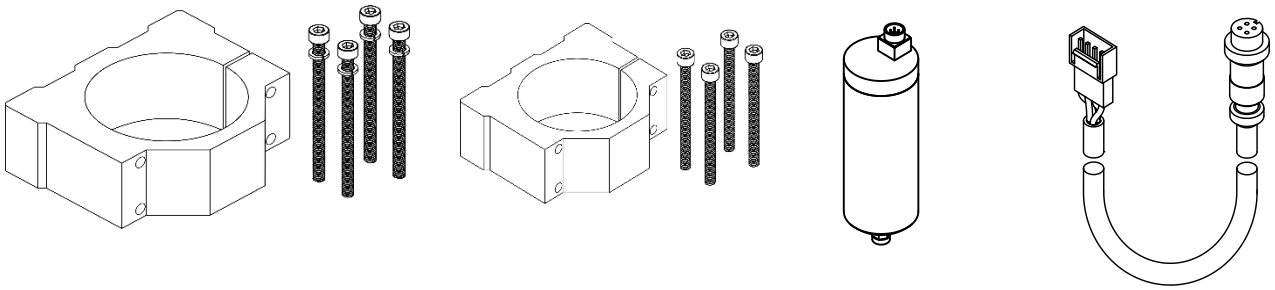

Model	Sensor Cable	Brake Cable	30M6 Roll-in T-nut	Y Limit Sensor Trigger
Part Number	CB9X, Y, A, Z	CB10	NR36	Y6
Quantity	4	1	3	2

Model	T-Track Cover	Cable Tie	Spiral Wrapping Band	M5x16 Galvanized Socket Head Screw with Lock Washer
Part Number	CM2	CM3	CM1	FGA516, FLB5
Quantity	4m	10	1.5m	16

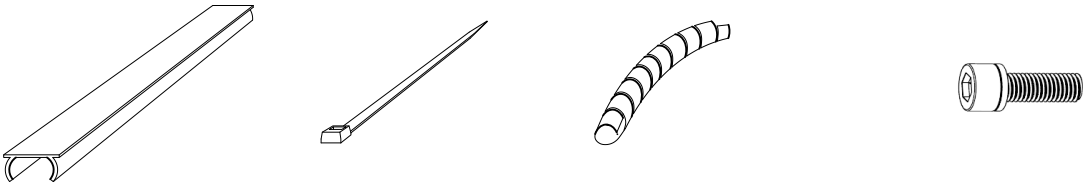

Model	M6x20 Galvanized Socket Head Screw with Lock Washer and Flat Washer	M4x10 Black Socket Head Screw with Lock Washer and Flat Washer
Part Number	FGA620, FLG6, FFG61	FBB410, FLB4, FFB41
Quantity	3	2

INSTALLING MOTORS

- Install four **Shaft Couplings** ③ onto the ends of the ball screws ① to an 11.5 mm depth, as shown in the diagram.
- Tighten the set screw on each **Shaft Coupling** ③ to secure it to the ball screw ①.
- Install three **Motors** ④ (without brakes) into the X- and Y-axis **Shaft Couplings** ③, with the wire leads ⑥ facing downward, until they contact the mounting brackets ②.
- Install the **Motor with Brake** ④ into the Z-axis **Shaft Coupling** ③, with the wire leads ⑥ facing backward, until it contacts the mounting bracket ②.
- Secure the four **Motors** ④ to the mounting brackets ② using sixteen **M5x16 Galvanized Socket Head Screws** ⑤ with Lock Washers, fully tightening each screw.
- Tighten the set screws on each **Shaft Coupling** ③ to secure the **Motor** ④ to the ball screw ①.

Note:

- **A**fter installing a motor without brake, avoid moving X-Assembly and Z-Assembly too fast, as rapid motion creates a high push-back voltage that could harm the drivers in the controller.
- After installing a motor with brake, the spindle on the Z-Assembly is locked in place. The brake is released only when powered by the controller.

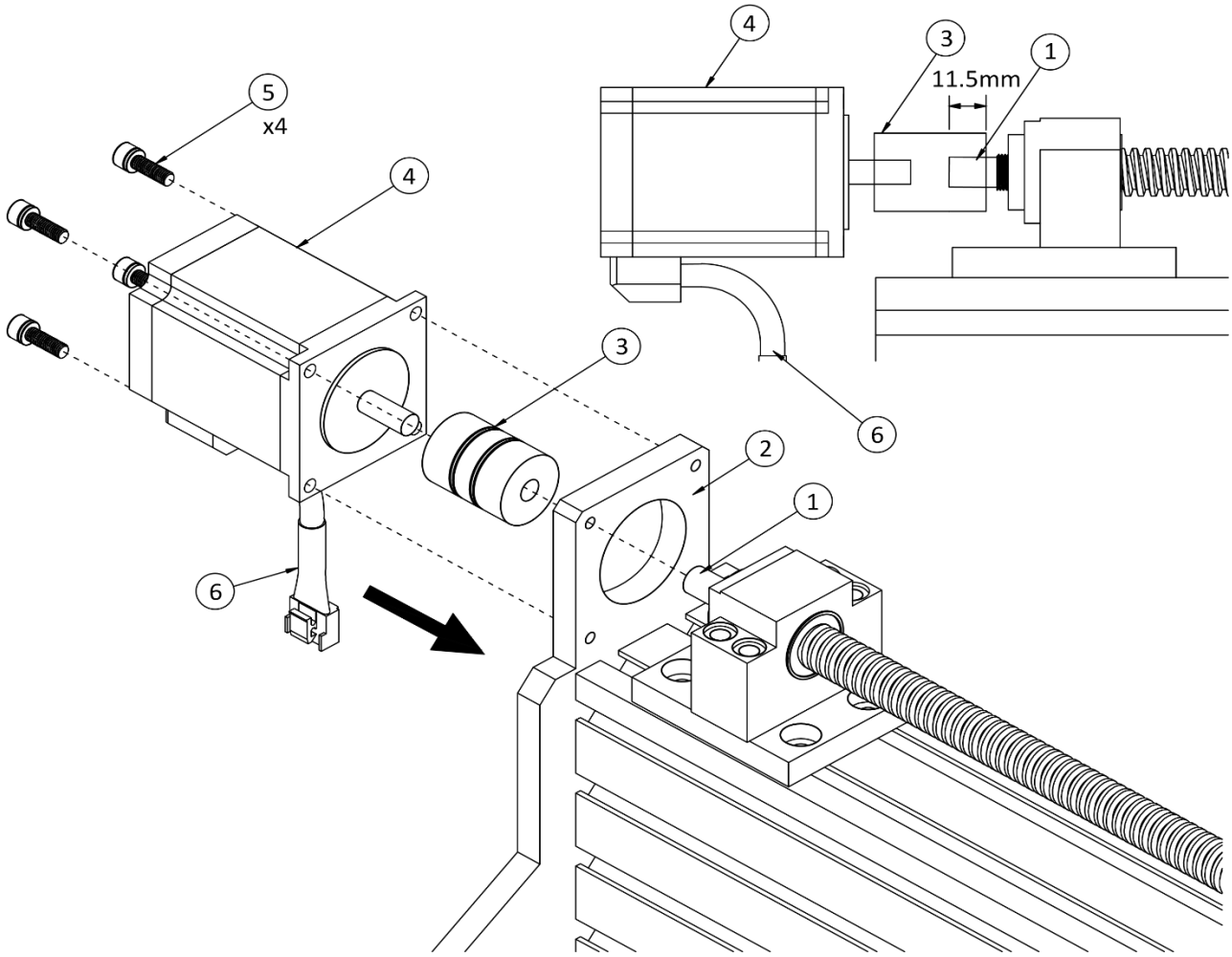

Key No	Part Number	Model	Quantity
3	M4	Shaft Coupling	4
4	M1, M2	Motor	4
5	FGA516, FLB5	M5x16 Galvanized Socket Head Screw with Lock Washer	16

INSTALLING Y LIMIT SENSOR TRIGGERS

- Secure two **Y Limit Sensor Triggers** ② to the left and right **XY-Joining Plate** ⑥ using two **M4x10 Black Socket Head Screw** ④ with Lock Washer and Flat Washer.
- Adjust the **Y Limit Sensor Triggers** ② to maintain a gap of less than 2 mm between them and the front surfaces of the **Y-Limit Sensors** ①. Avoid any contact between the triggers and the sensor surfaces.

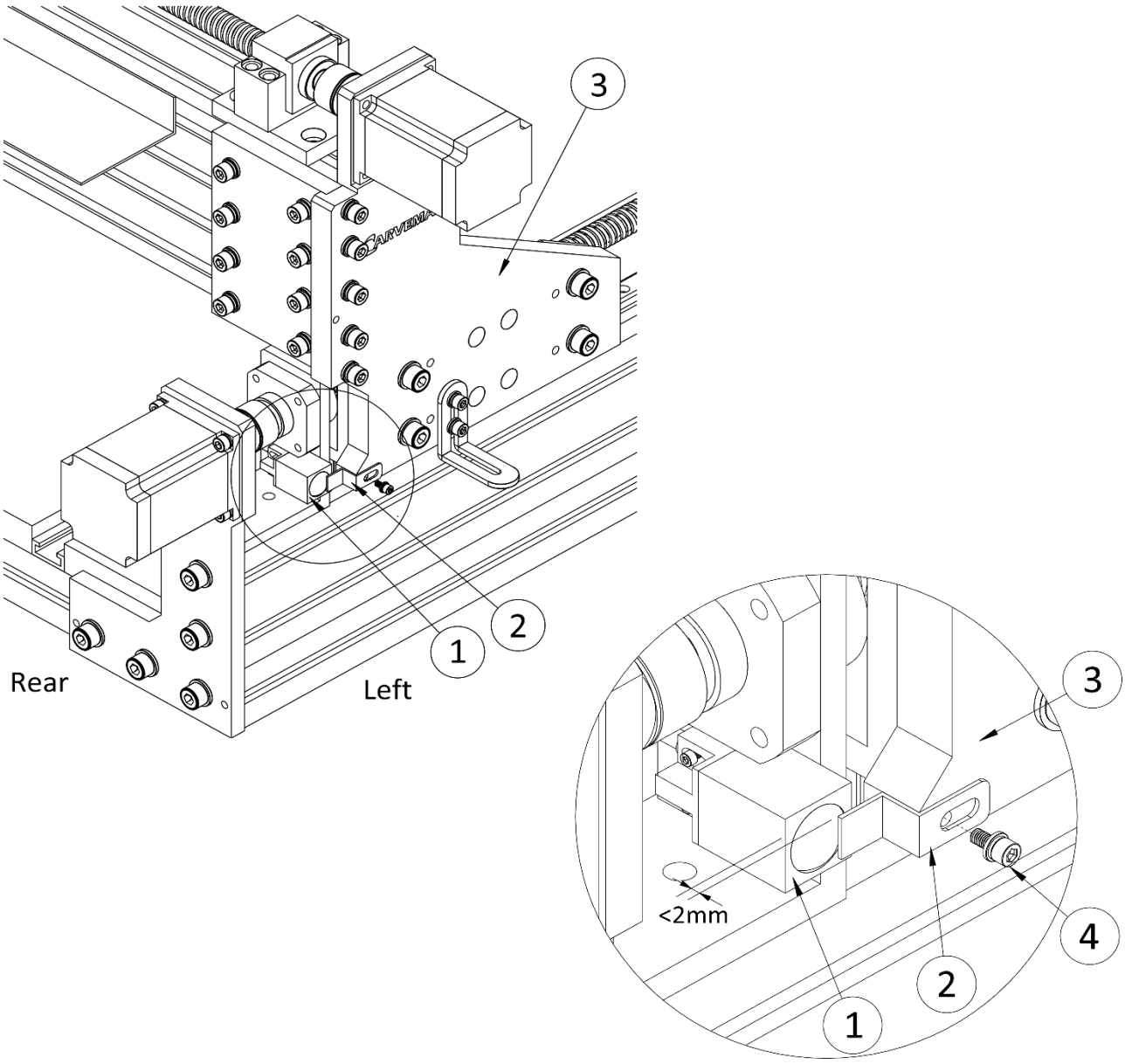

- Reinstall the two **L-shaped covers** onto both **Y Assemblies** (previously removed during Y-Assembly installation).

Key No	Part Number	Model	Quantity
1	SW18	Y Limit Sensor	2
2	Y6	Y Limit Sensor Trigger	2
4	FBB410, FLB4, FFB41	M4x10 Black Socket Head Screw with Lock Washer and Flat Washer	2
5	FBA322	M3x22 Black Socket Head Screw	4

INSTALLING VFD ENCLOSURE

NOTE:
FOR ST494B AND ST4933B MODELS WITHOUT A STAND, THE VFD ENCLOSURE CAN BE MOUNTED ON A WALL OR ANY NEARBY SUPPORT AROUND THE MACHINE, AS LONG AS THE CABLES CAN REACH BOTH THE ELECTRONICS CONTROL BOX AND THE SPINDLE'S MAXIMUM TRAVEL.

- The **VFD Enclosure** ② mounts on the up-left corner of the stand's left side.
- Orient three **Mounting Brackets** ① as shown in the diagram.
- Insert three **30M6 Roll-in T-Nuts** ⑤ into the slots of the stand at the spots indicated by arrows in the diagram.
- Thread two **M6x20 Galvanized Socket Head Screw Sets** ③ with flat Washers, lock washers and nuts into two of the **30M6 Roll-in T-Nuts** ⑤ in the base's Y-Beam ⑦.
- Hang the VFD Enclosure by sliding its top two **Mounting Brackets** ① onto the two screws.
- Secure the left **Mounting Brackets** ① to the stand's leg ⑧ by threading one **M6x20 Galvanized Socket Head Screw Sets** ⑥ into the remaining **30M6 Roll-in T-Nuts** ⑤.

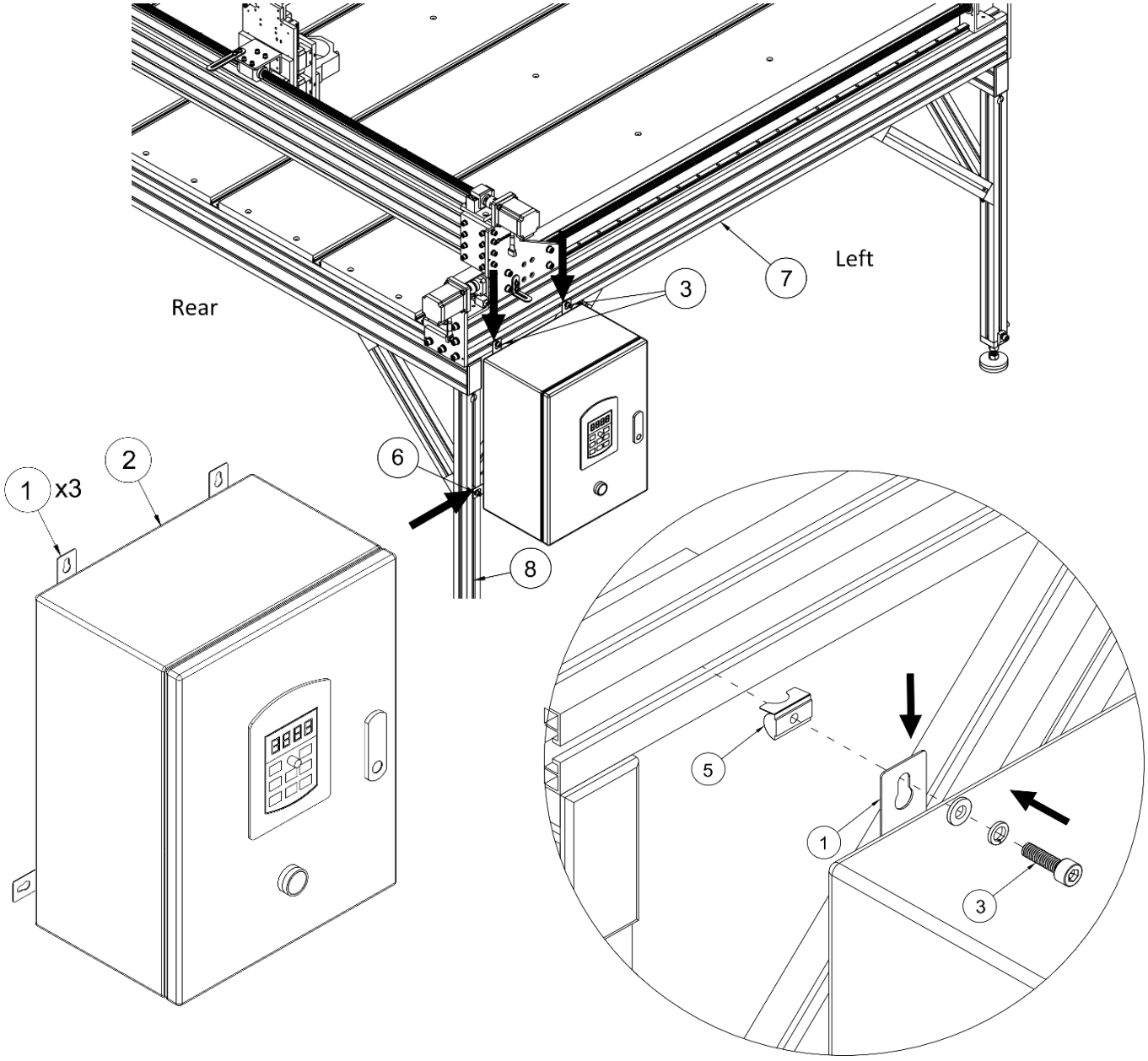

Key No	Part Number	Model	Quantity
1		Mounting Brackets	3
2	VB15, VB22	VFD Enclosure	1
3,6	FGA620, FLG6, FFG61	M6x20 Galvanized Socket Head Screw with Lock Washer and Flat Washer	3
5	NR36	30M6 Roll-in T-nut	3

INSTALLING SPINDLE

- The top four threaded holes ① on the Z-Assembly's carriage plate ③ are for **80 mm Spindle Mount** ④, while the lower four ② are for **65 mm Spindle Mount**.
- Attach the **Spindle Mount** ④ to the matching holes on the Z-Assembly using four **M6 Screws and Lock washers** ⑥ (included with the **Spindle Mount** ④).
- Align the **Spindle Mount** ④ flush with the top or bottom edge of the Z-Assembly's carriage plate ③**.**
- Fully tighten the left two screws ⑥ to secure the **Spindle Mount** ④.
- Slide the **Spindle** ⑤ into the **Spindle Mount** ④ from the top to the desired position, then tighten the right two screws ⑥ to secure it.
- To access the **Spindle** ⑤, loosen only the right two screws ⑥.

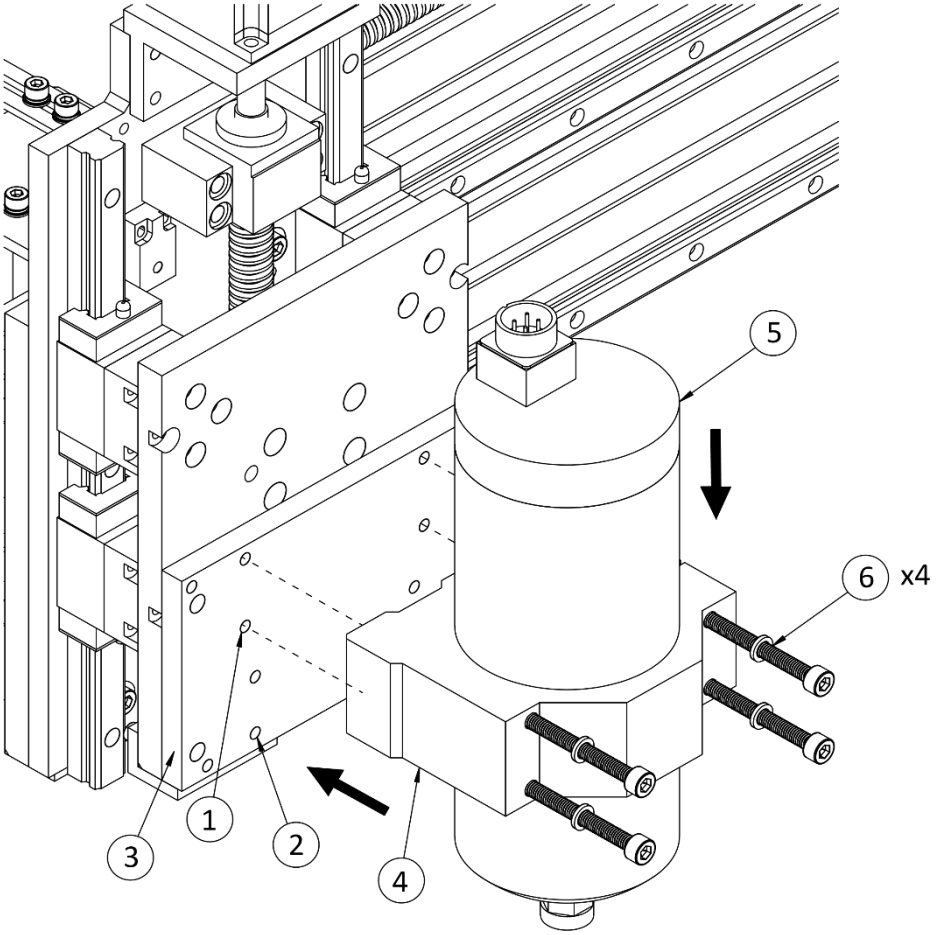

Key No	Part Number	Model	Quantity
4	Z80, Z65	Spindle Mount	1
5	S15	Spindle	1
6		M6 Screw with Lock Washer (Z80)	4

CABLE WIRING

⚠ WARNING:

- **DO NOT CONNECT OR DISCONNECT CABLES WHILE THE CONTROLLER IS POWERED ON.**
- **USE A GROUNDED, 3-PRONG OUTLET FOR THE POWER SUPPLY; UNGROUNDED 2-PRONG OUTLETS ARE PROHIBITED.**
- Four Motor cables and four limit sensor cables are color-coded for each axis: red for X axis, blue for Left Y axis (Y), green for right Y axis (A), and yellow for Z axis.
- All connectors are keyed to prevent incorrect connections. Ensure each cable is securely locked before powering on.
- Open all drag chain link caps with a small screwdriver before routing cables.
- Connect cables to the machine components according to the wiring diagram, then route them through the drag chains before connecting to the controller, following the diagrams and tables below.
- Use **Spiral Wrapping Bands** and **Zip Ties** to secure and organize the cables.

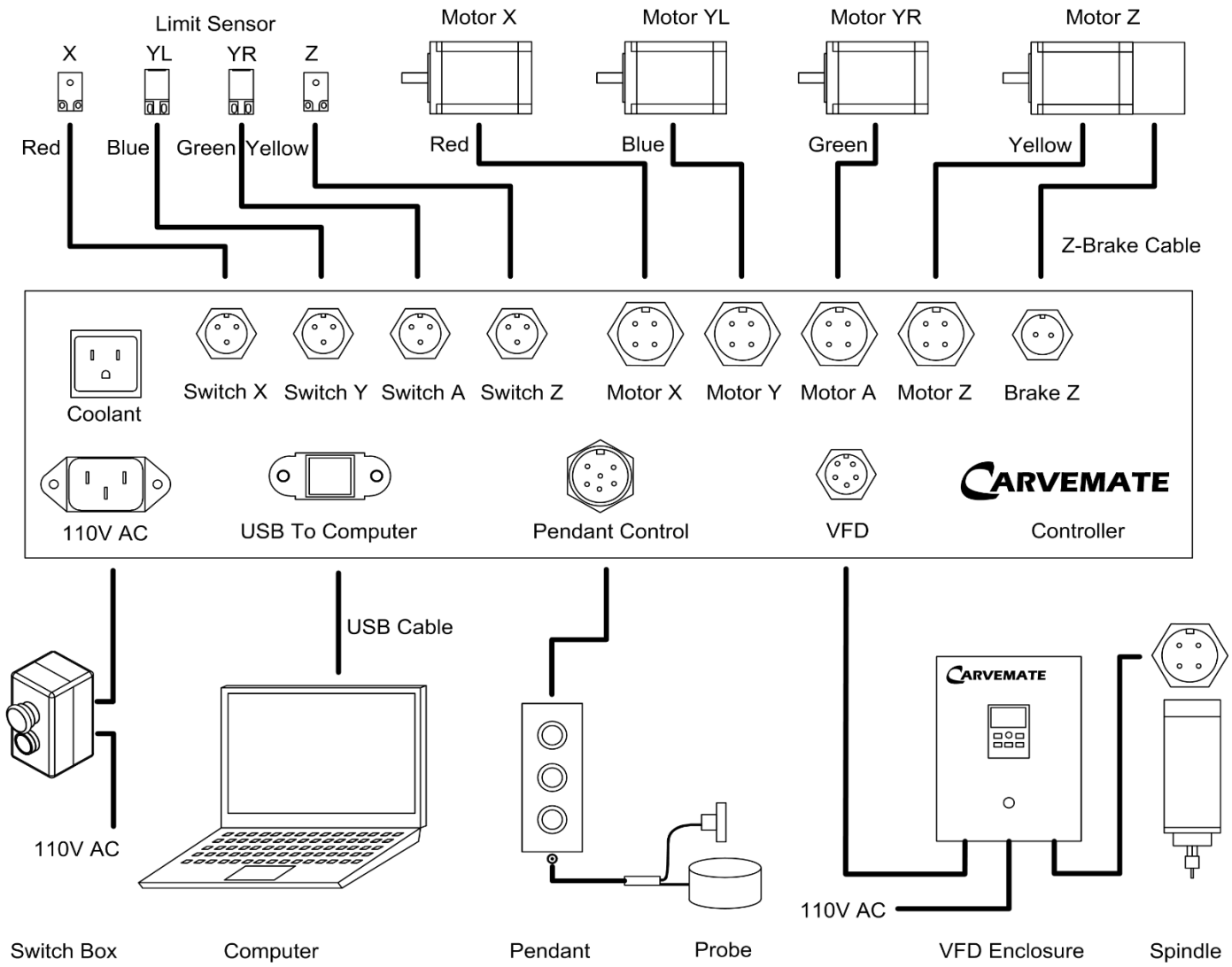

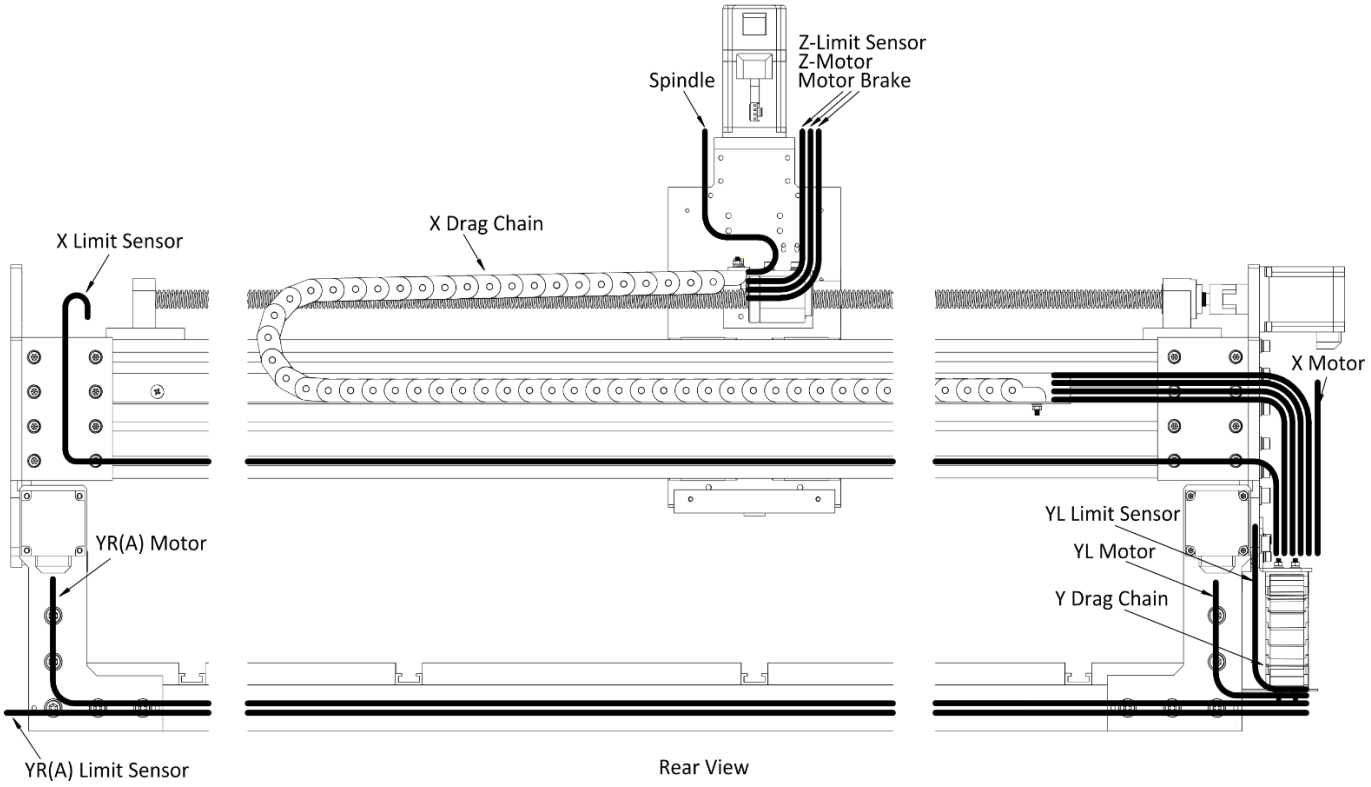

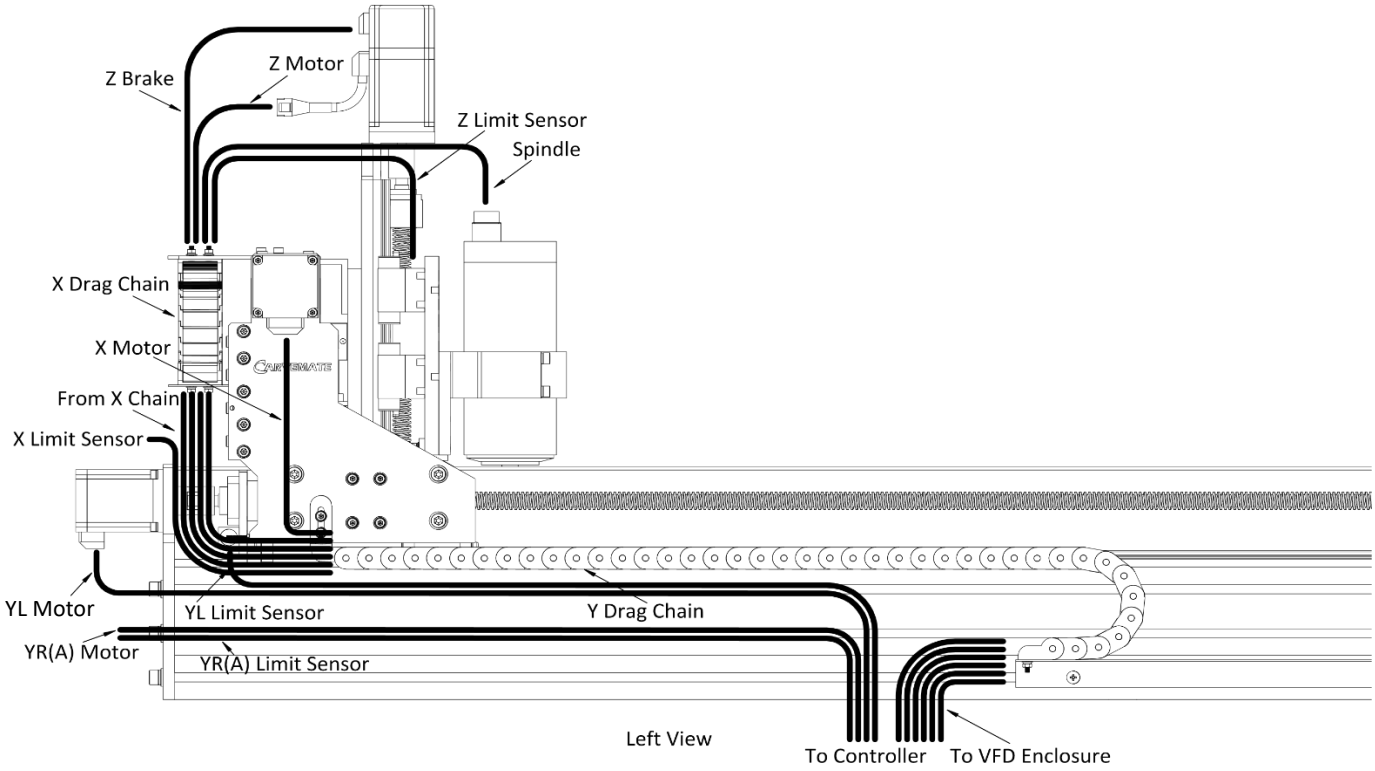

- Leave enough slack in the spindle cable to allow full Z-axis movement. Use a zip tie to fasten it to the Z-Assembly.

Part Number	Cable	Color	From	Route	To
CB8X	X-Motor Cable	Red	X-Motor	Y-Drag Chain	Controller
CB8Y	YL-Motor Cable	Blue	YL-Motor	YL-Beam Slot	Controller
CB8A	YR-Motor Cable	Green	YR-Motor	Rear X-Cross Bar of Base > YL-Beam Slot	Controller
CB8Z	Z-Motor Cable	Yellow	Z-Motor	X-Drag Chain > Y-Drag Chain	Controller
CB9X	X-Sensor Cable	Red	X-Sensor	X-Assembly Slot > Y-Drag Chain	Controller
CB9Y	YL-Sensor Cable	Blue	YL-Sensor	YL-Beam Slot	Controller
CB9A	YR-Sensor Cable	Green	YR-Sensor	Rear X-Cross Bar of Base > YL-Beam Slot	Controller
CB9Z	Z-Sensor Cable	Yellow	Z-Sensor	X-Drag Chain > Y-Drag Chain	Controller
CB10	Z-Brake Cable		Z-Brake	X-Drag Chain > Y-Drag Chain	Controller
	Spindle Cable		Spindle	X-Drag Chain > Y-Drag Chain	VFD Enclosure

Part Number	Cable	From	To
CB5	USB Cable	Controller	Computer
	Power Cord In (Switch Box)	Power Supply	Switch Box
	Power Cord Out (Switch)	Switch Box	Controller
	Power Cord (VFD)	VFD Enclosure	Power Supply
	VFD Control Cable	VFD Enclosure	Controller

- **Secure** the cables in the aluminum extrusion slots using **T-Slot Cover** ①.

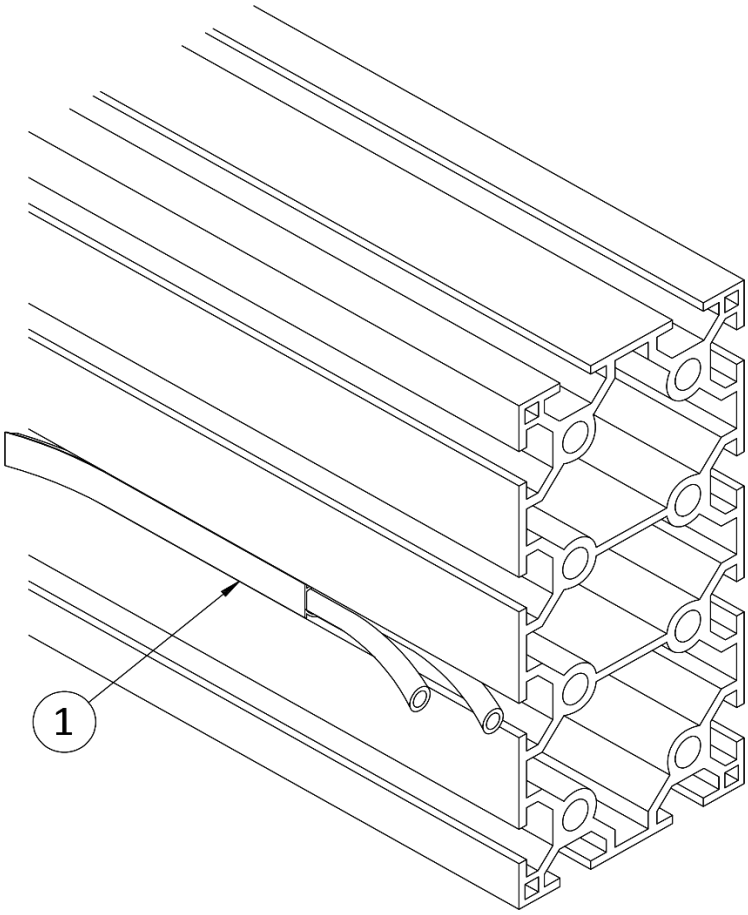

1.

COORDINATE SYSTEM

- The CNC machine operates with two coordinate systems: the Machine Coordinate System **(MCS)** and the Work Coordinate System **(WCS)**.
- The MCS is the machine's fixed, default coordinate system. Its origin (X0, Y0, Z0) is the home position, located near the X, Y, and Z limit sensors at the top-right-back of the machine. Operators cannot set, reset, or select the MCS. The machine operates entirely in negative coordinate space relative to this origin.
- The WCS defines the workpiece location within the machine's working area. Operators set the WCS origin based on the MCS. These custom settings are referred to as work offsets.

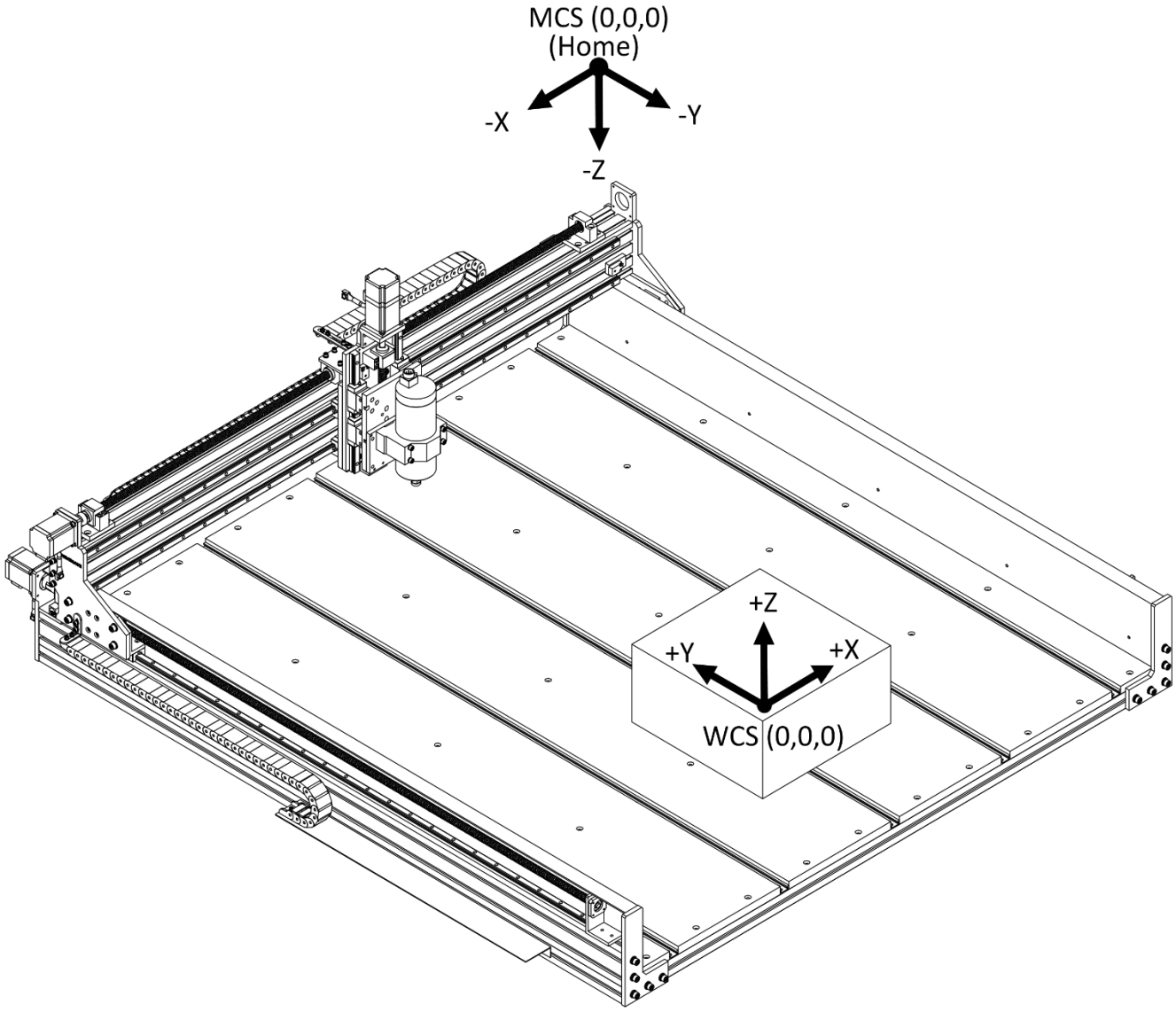

ADJUSTING LIMIT SENSORS TO SET MACHINE HOME POSITION

- This procedure establishes the machine home (X0, Y0, Z0) by adjusting the limit sensor trigger points.
- Sensor LEDs remain illuminated when untriggered and turn off when triggered or if a malfunction occurs.
- The X and Z Limit Sensors are pre-installed and generally require no adjustment.
- Connect the four limit sensors and Z-brake to the controller. Disconnect all other cables, then power on the controller.
- Verify that each sensor LED is illuminated.
- To check the X-Limit Sensor function: Gently push the Z-Assembly toward the X-Limit Sensor. The sensor must be triggered before the Z-Assembly contacts any structural part of the machine.
- To check the Z-Limit Sensor function: Gently lift the moving parts of the Z-Assembly upward. The Z-Limit Sensor must be triggered before the assembly reaches its mechanical top limit.
- Relocate the X and Z Limit Sensors if the X or Z home positions need adjustment.
- To adjust the Y home position, gently push the X-Assembly toward the rear limit of the machine. Then, pull it back until both ends of the X-Assembly are evenly aligned, approximately 3 mm away from the rear limit.
- Adjust the left **Y-Sensor trigger** ② forward or backward until the exact moment it triggers the **Y-Limit Sensor** ①, then secure the sensor trigger ② in place.
- Repeat the same process for the right **Y-Sensor trigger**.
- Slide the X-Assembly back and forth to confirm consistent triggering at the correct position.
- After adjustment, pull the X-Assembly away to ensure the sensors return to their untriggered state. During normal machine operation, moving parts must not reach or pass the trigger points.

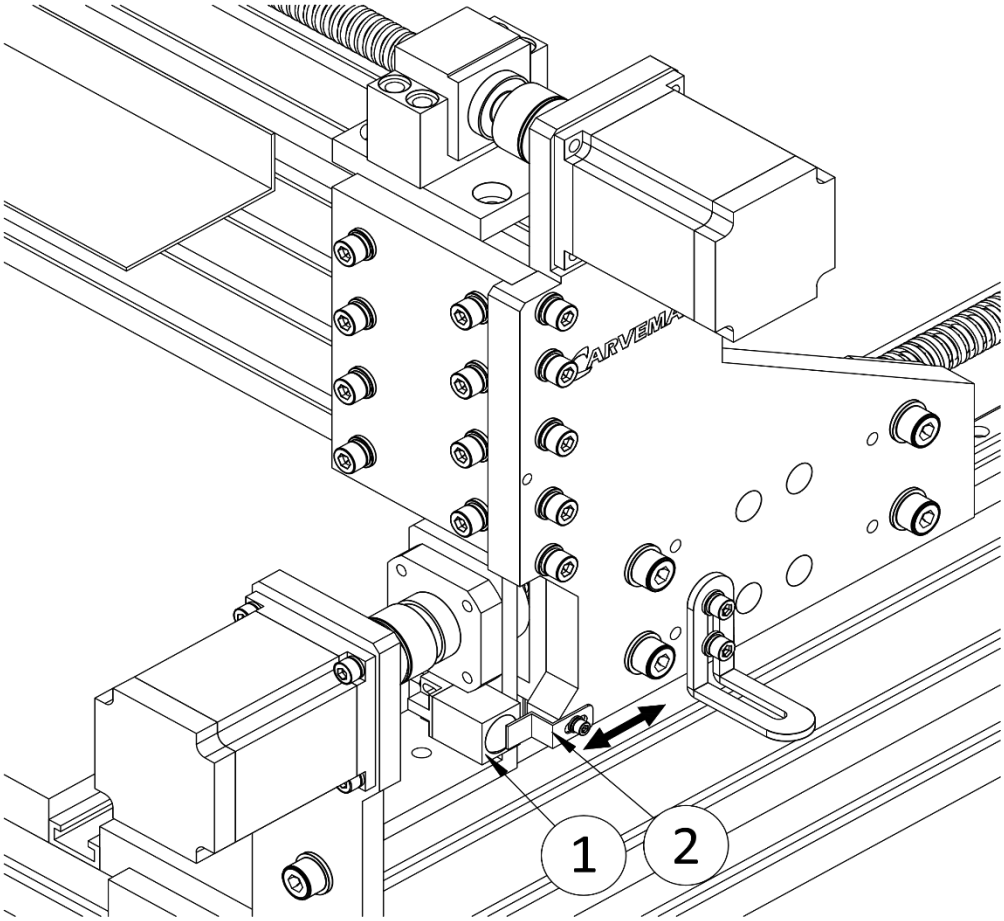

MECHANICAL CHECK

- Connect the four limit sensers and Z-brake to the controller. Disconnect all other cables, then power on the controller.
- Gently move the X, Y, Z assemblies back and forth through their full travel range. Movement should feel uniformly firm but smooth, without abnormal friction, vibration, or unusual mechanical noise. If any irregularities are detected, refer to the “Troubleshooting” section.
- Push the X, Y, Z assemblies toward the limit sensors, ensuring the sensors remain untriggered.

CONTROLLER

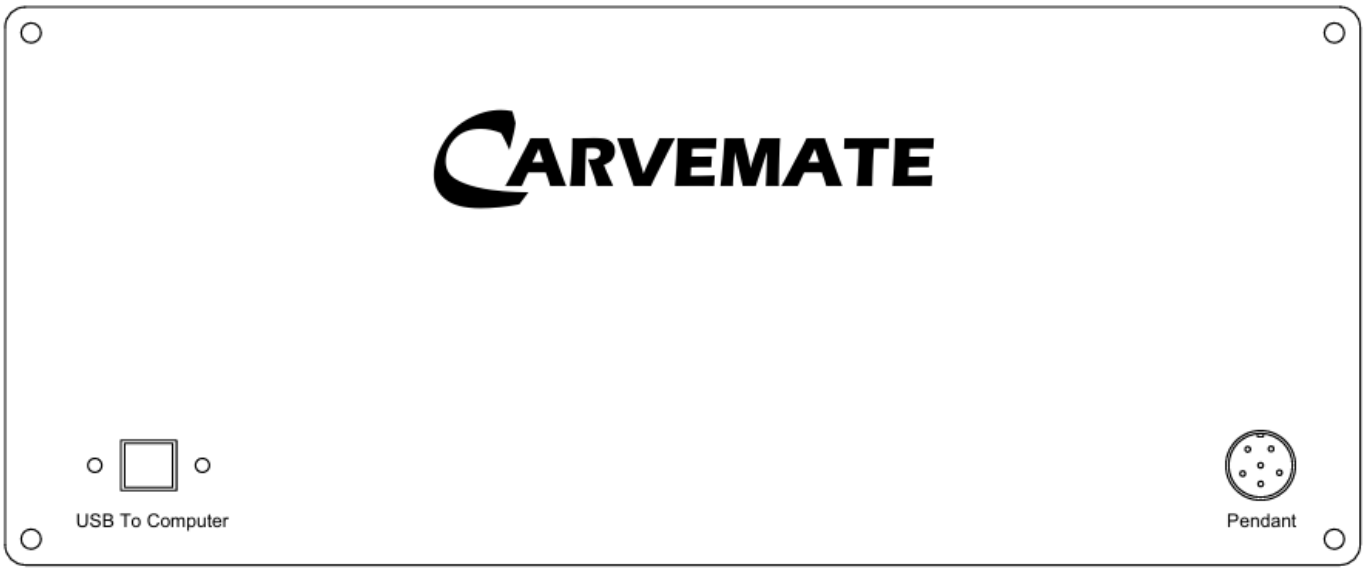

Front Panel

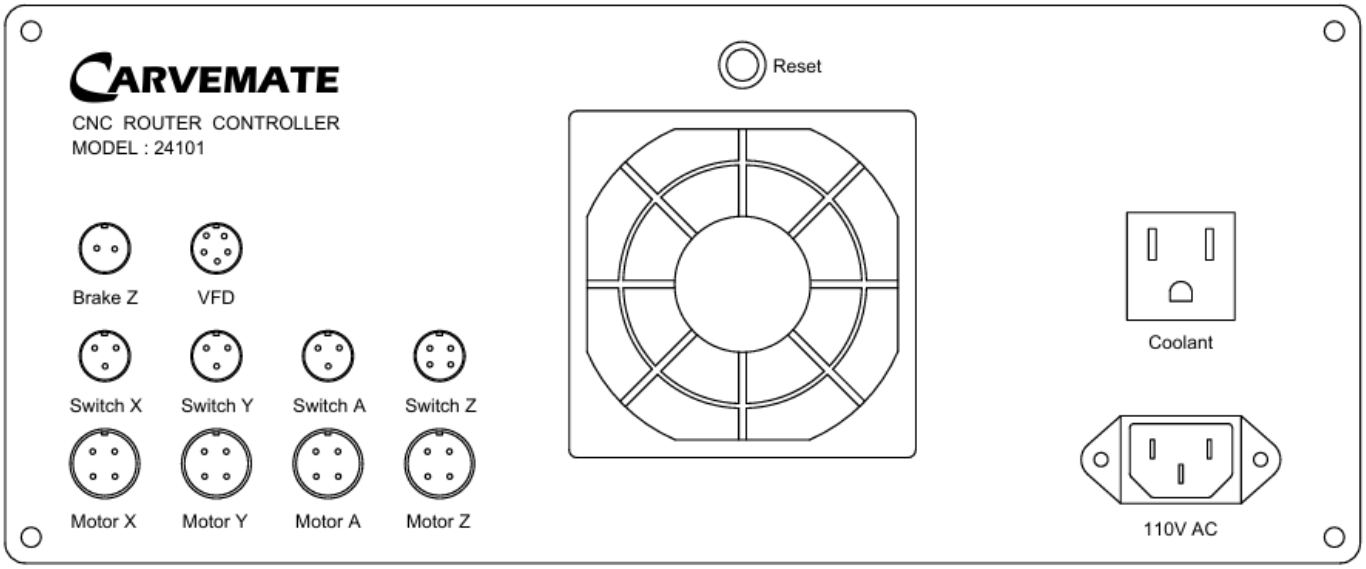

Rear Panel

- The “Reset” button on the rear panel resets the GRBL firmware to recover from errors or restart motion control.
- The “Coolant” socket is activated by the GRBL M08 command, delivering 110V AC at 5A for a spindle flood coolant pump. **Do not connect any device exceeding 1 HP (750 W).**

CONNECTING CONTROLLER TO UGS

- The CNC router's controller runs on GRBL firmware. **When generating G-code using CAM software, ensure the post-processor is set to GRBL (mm) (*.gcode) format.**
- Universal G-Code Sender (UGS) software, running on a computer, communicates with the controller's GRBL firmware via a USB cable.
- Other third-party GRBL controller software may be used at the user's risk. Improper settings or operations could cause damage to the machine. This manual is based on using UGS for all machine setup and operation instructions.
- Users should refer to external resources for a comprehensive understanding of UGS features. This manual provides only basic instructions.
- UGS software and resources are available at the following link:
  https://winder.github.io/ugs_website/
  https://github.com/winder/universal-g-code-sender/releases
- UGS is under active development, so it is recommended to install the latest stable version for the best performance. Visit the UGS download page here and select the appropriate version for your operating system:
  https://winder.github.io/ugs_website/download/
- On Windows, the downloaded file is in .ZIP format. Unzip it, then open the folder "ugsplatform-win", go into the "bin" folder, where you'll find two executable files:
  For Windows 32-bit version, double-click "ugsplatform.exe".
  For Windows 64-bit version, double-click "ugsplatform64.exe".
- To add a desktop shortcut, right-click the executable file, select "Send to" > "Desktop (create shortcut)". This creates a quick-access icon for launching UGS.
- On macOS, download the UGS .dmg installer and save it to your desktop. Open the .dmg file, then drag the UGS icon into the Applications folder. Go to Applications, double-click the UGS icon to start the program. If it fails to launch, ensure that Java is installed. If not, install Java from java.com first, then try again.
- After launching UGS, connect the controller to the computer's USB port with the USB cable.
- In the toolbar at the top of the interface, set the baud rate to 115200, select "GRBL" from the firmware combo box, and choose the correct port from the port box.

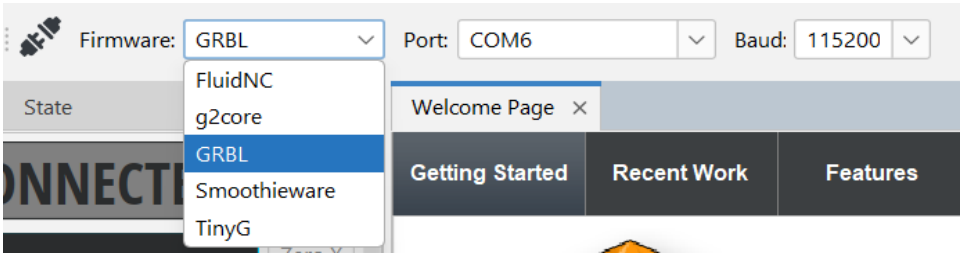

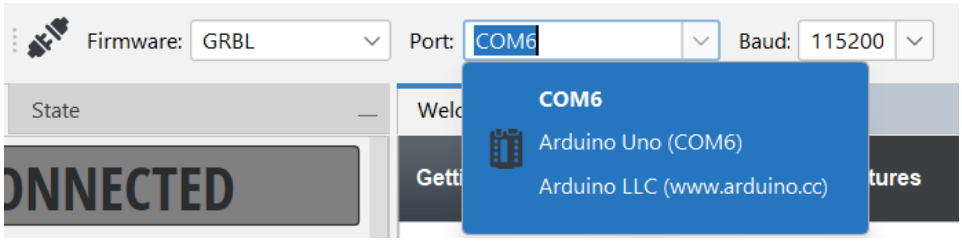

- Click the connect button (the buckle icon). If the status shows "IDLE" or "ALARM", the machine has successfully connected.

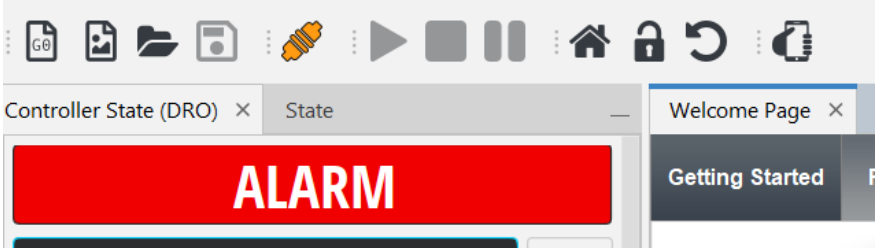

- In the top toolbar, click the “Unlock” button to clear the “ALARM” state. The status should update to “IDLE”, indicating the machine is ready.

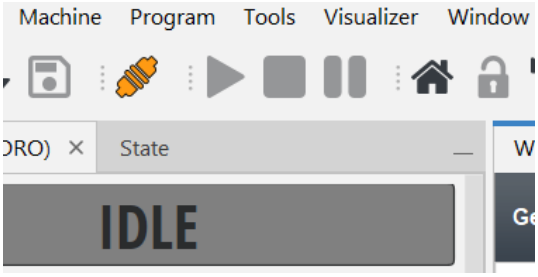

CONFIGURING GRBL

⚠ WARNING:

- **DO NOT CHANGE ANY OF THE SETTINGS LISTED IN THIS SECTION UNLESS YOU FULLY UNDERSTAND WHAT YOU ARE DOING! IMPROPER CONFIGURATION CAN RESULT IN MECHANICAL DAMAGE OR LOSS OF PRECISION.**
- **THIS SECTION PROVIDES ONLY GENERAL INFORMATION AND ACCESS INSTRUCTIONS FOR GRBL SETTINGS. IT IS NOT INTENDED AS A GUIDE FOR MAKING CHANGES.**
- **ALWAYS RUN A HOMING CYCLE AFTER POWER-UP, RECONNECTION, OR SOFTWARE RESET. JOGGING WITHOUT HOMING CAN RESULT IN OVERTRAVEL AND POTENTIAL MACHINE DAMAGE DUE TO UNKNOWN SPINDLE POSITION.**

- To access machine settings, click “Machine” tab in the top menu, then select “Firmware Settings” from the dropdown menu. The configuration windows will open.
- Click “Export” to save a backup of the current settings. Click “Import” To restore settings from a saved file.
- Always backup the settings before making any change.
- Most of settings can also be edited by selecting “Setup Wizard” from “Machine” tab at the top toolbox.

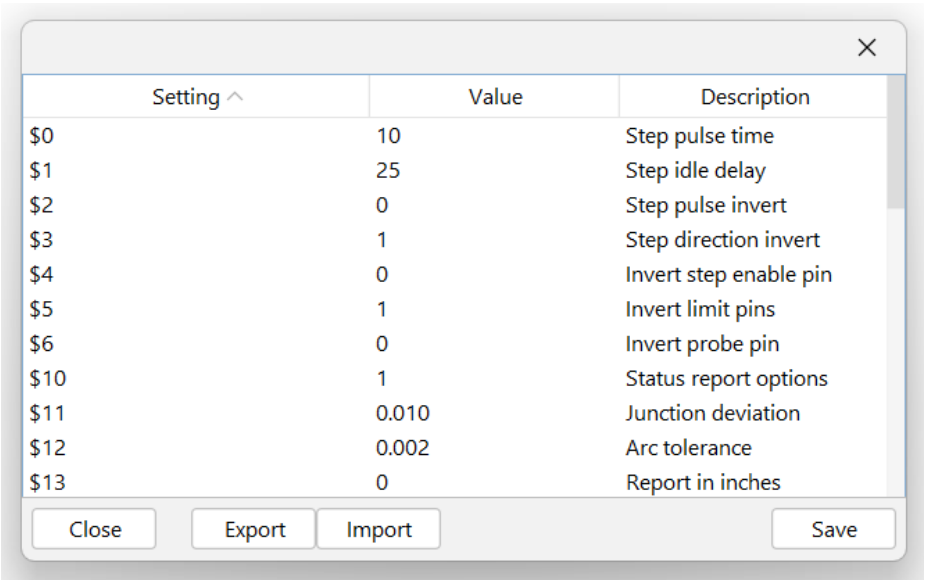

Setting	Value	Description
$0	10	Step pulse time
$1	25	Step idle delay
$2	0	Step pulse invert
$3	1	Step direction invert
$4	0	Invert step enable pin
$5	1	Invert limit pins
$6	0	Invert probe pin
$10	1	Status report options
$11	0.010	Junction deviation
$12	0.002	Arc tolerance
$13	0	Report in inches

Close Export Import Save

PRIMARY SOFTWARE OPERATIONS

- The toolbar can be customized by right clicking in the toolbar and selecting “Customize”. From there new actions can be added or removed by dragging them to or from the desired position. The default toolbar layout, from left to right, is as follows:
  New G-code File, New Design, Open File, Save File, Connect/Disconnect, Send (Resume), Stop, Pause, Home, Unlock, Soft Reset, Web Based Pendant Control.

- The Digital Readout (Controller State) panel displays the machine’s current status, including work coordinates, machine / spindle speeds and G-Code states.

From top to bottom:

- Current machine state (Idle, Run, Jog, Alarm, etc.),
- Current work coordinates and machine coordinates
- Axis zeroing buttons (X0, Y0, Z0) for setting each current axis position to zero in the WCS.

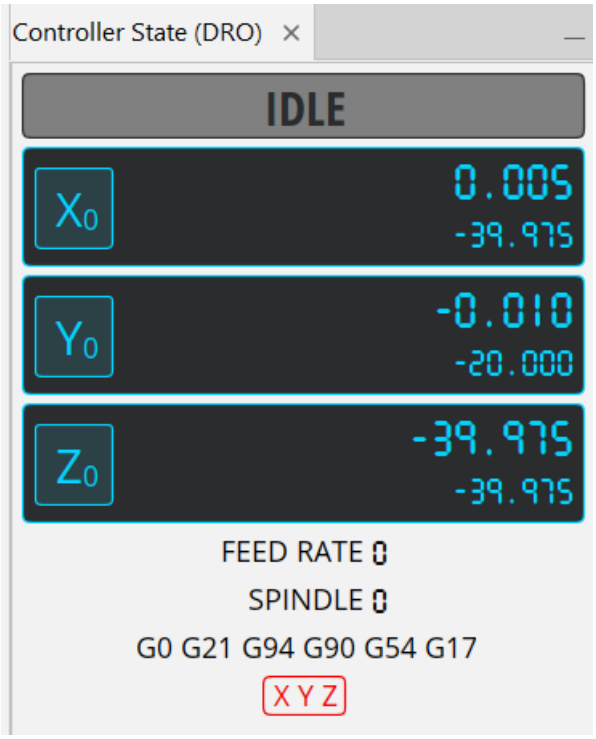

- The “Jog Controller” panel provides manual motion control of the machine.
  X-: Left X+: Right
  Y-: Forward Y+: Backward
  Z-: Down Z+: Up
- If the panel appears grayed out with an “ALARM” status, click the “Unlock button” to clear the alarm. The status should update to “IDLE”, indicating the machine is ready.
- Unit:
  Step size: mm or inch,
  Feed rate: mm per Minute or inch per minute

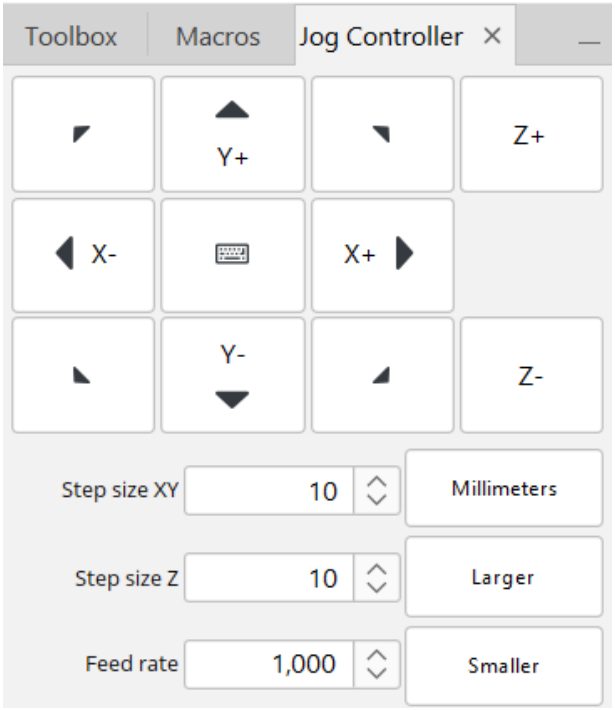

- Reset Zero: Sets the current coordinate (X, Y, Z) in the Machine Coordinate System (WCS) to (0, 0, 0) in the Work Coordinate System (WCS).
- Home Machine: Moves the spindle to the machine's home position (0, 0, 0) (origin of MCS).
- Go to XY Zero: Moves the spindle to (X0. Y0) only in the WCS **without changing the Z-axis height**. **Ensure the travel path is clear to avoid potential collisions.**
- Return to Zero: Moves the Z-axis to **only 5 mm above Z0** (typically the workpiece surface), then moves the spindle to (X0. Y0) in the WCS. **Ensure the travel path is clear to avoid potential collisions.**

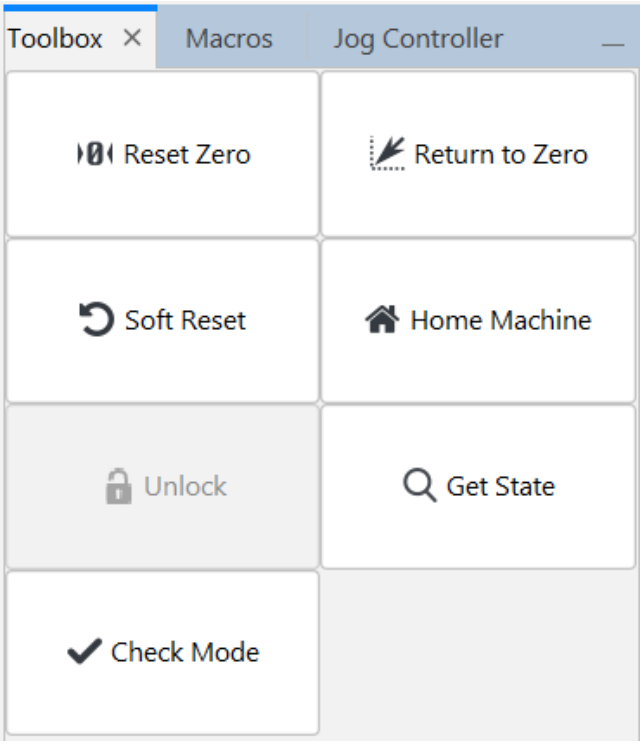

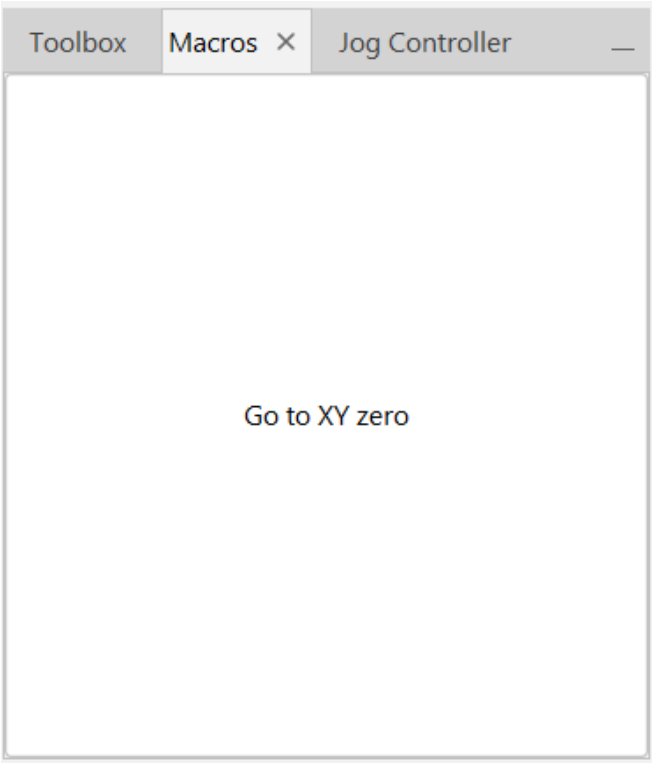

LIMIT SENSOR CHECK

- In section 1, the limit sensors were adjusted for proper functionality. This section checks whether UGS correctly detects each sensor's live status-triggered or untriggered.
- Select "Setup Wizard" from the "Machine" tab at the top toolbox.
- Click "Next" to reach "5. Limit Switches".
- Ensure both "Enable limit switches" and "Invert limit switches" are checked.
- The X, Y, and Z sensor status blocks should now appear green.
- Using a screwdriver, manually trigger each limit sensor (X, Y, A (YR), Z). The corresponding status block (X, Y, Y and Z, Z) should turn red when triggered. If not, refer to the "Troubleshooting" section.

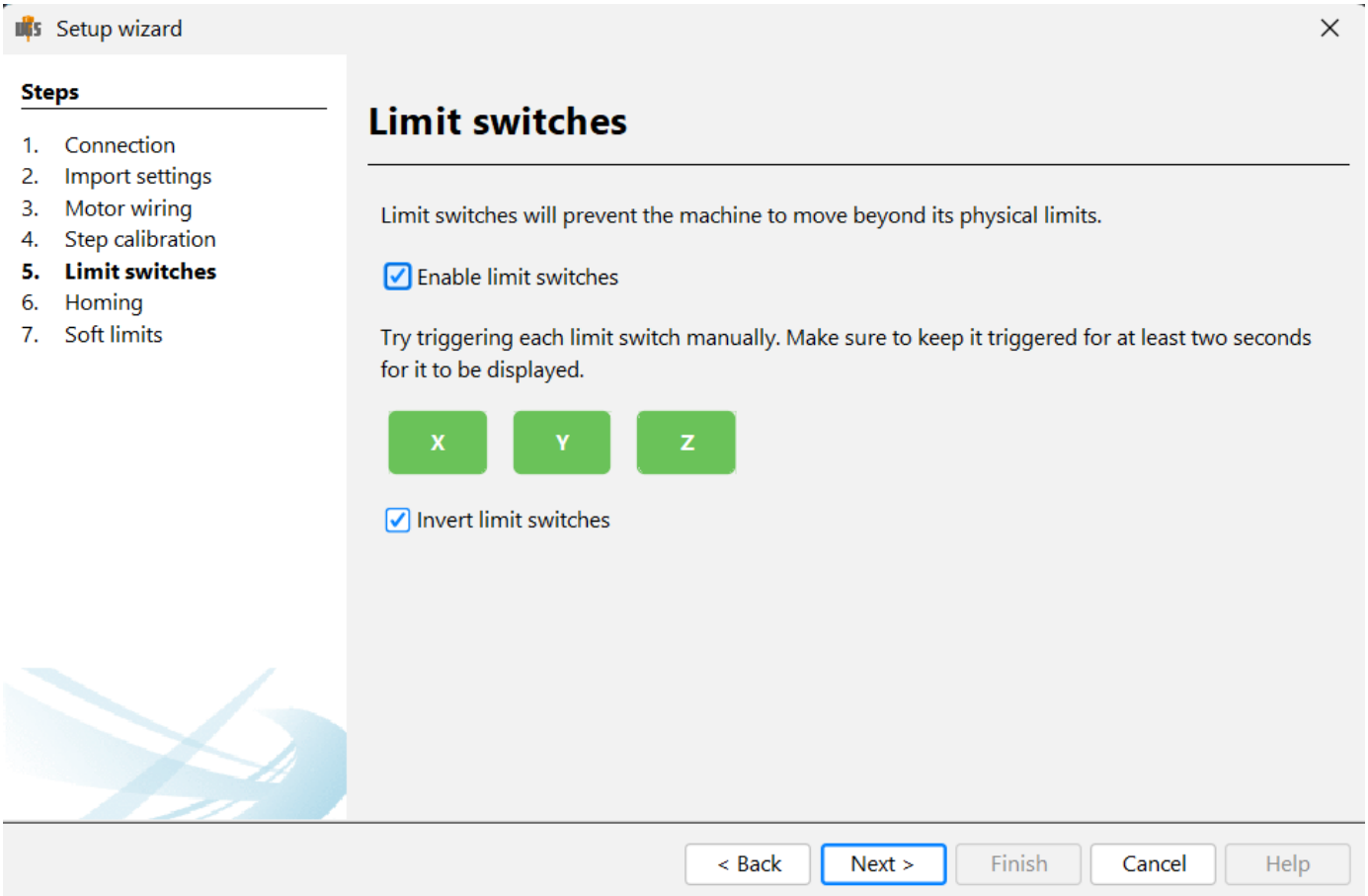

MOTION AND SPEED CHECK

- To ensure safe motion and accurate calibration, start with a low feed rate and gradually increase to full operating speed.
- Make sure the machine is near the home position and all limit sensors are untriggered. Mark reference points of X, Y, and Z axes for measurement.
- Set the feed rate to 1000 mm/min (or 40 ipm). Set the XY step size to 100 mm (or 5 in) and the Z step size to 20 mm (or 1 in).
- Jog the machine using X-, Y-, and Z- buttons. Confirm the movement direction is as expected (left, forward, down) and the travel distances match step size settings. If not, refer to “Troubleshooting” section.
- Jog the machine back to the start position using X+, Y+, and Z+ buttons.
- Click the “Home” button in the toolbar to home the machine.
- Gradually increase step sizes up to machine travel limits:
  - ST4949: X = 1261 mm, Y = 1261 mm
  - ST4933: X = 1261 mm, Y = 841 mm
  - Z = 132 mm
- Increase feed rate in steps (2000, 4000, 6000, 10000, then maximum speed). Monitor for smooth motion and no abnormal noises at each step:
  - Max XY: 12000 mm/min (472 ipm)
  - Max Z: 8000 mm/min (315 ipm)

X-AXIS SELF-SQUARING

- The machine is equipped with two independent limit sensors on both Y-Assemblies. During the homing cycle, the X-Assembly automatically squares itself based on the trigger points of these sensors.
- Determine how much the X-Assembly needs to be adjusted to achieve proper squaring using any method you prefer. This manual does not provide detailed instructions.
- Turn off the controller. Manually rotate the ball screw to adjust the right side of the X-Assembly until it is square with the Y-axis.
- Turn on the controller. Adjust the trigger point of the right limit sensor as described in the “ADJUSTING LIMIT SENSORS TO SET MACHINE HOME POSITION” section.
- Run a homing cycle. If the X-axis is still misaligned, repeat the adjustment steps.

Z-AXIS TRAMMING

- Tramming is the process of squaring the Z-axis **Spindle** ② to ensure it’s perpendicular to the work surface in both the X and Y directions.
- Jog the Z-Assembly to the center of the work surface.
- This section describes a spindle body-based method for squaring the spindle. Other methods, such as directly measuring the cutting bit for higher accuracy, are not detailed here.
- Mount the **Spindle** ② into the **Spindle Mount** ③. Slide it down until the **Mount** ③ securely grips the top of the metal body.
- Jog the Z-Assembly up so an **Engineer’s Square** ① can reach the **Spindle** ②.
- Loosen the four **M6 Screws** ⑧ to allow the **Spindle Plate** ④ to move freely.
- Place the **Engineer’s Square** ① on the work surface against the left side of the **Spindle** ② (X direction), and check if the **Spindle** ② stands square with the work surface.
- Adjust one of the two **Set Screws** ⑦ at the bottom of the two **L-Shaped Brackets** ⑥ to square the **Spindle** ② in X direction. Only adjust one **Set Screw** ⑦ to ensure at least one side of the **Spindle Plate** ④ stays on the **L-Shaped Bracket** ⑥.

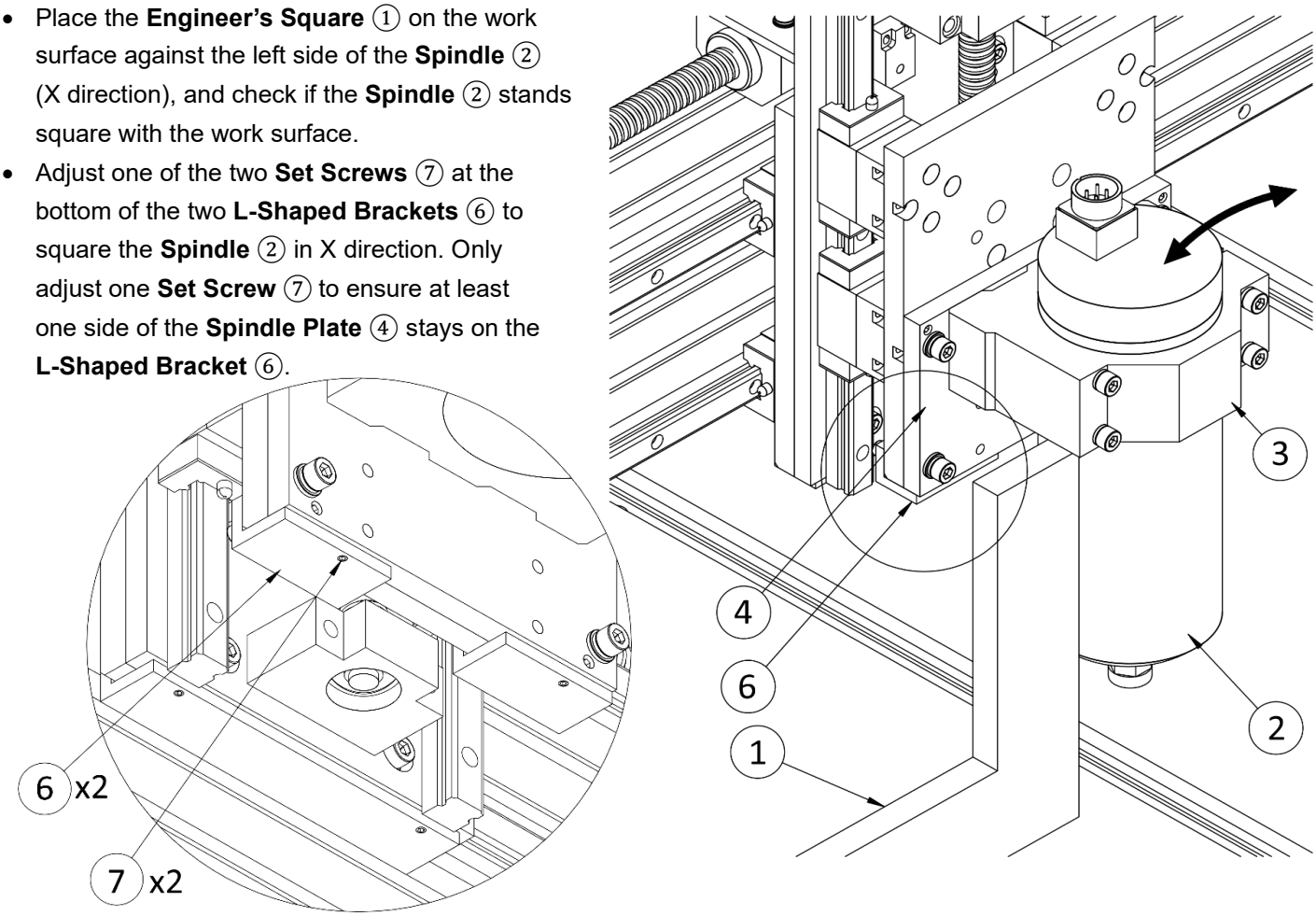

ADJUSTMENT

- Place the **Engineer's Square** ① on the work surface against the front side of the **Spindle** ② (Y direction), and check if the **Spindle** ② stands square with the work surface.
- To square the **Spindle** ② in the Y direction, turn either the top two **Set Screws** ⑨ or the bottom two clockwise the same amount to push the **Spindle Plate's** ④ top or bottom away from the **Carriage Plate** ⑤.
- Shim the gap between the **Spindle Plate's** ④ and the **Carriage Plate** ⑤, then fully tighten the four **M6 Screws** ⑧.

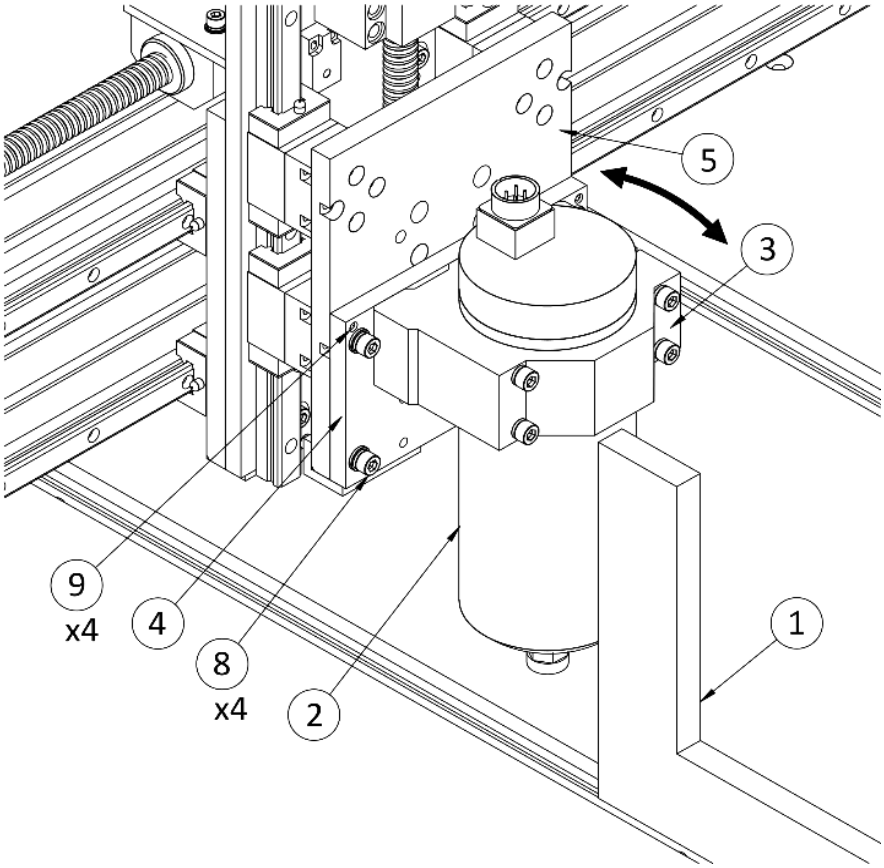

PENDANT BOX

- The pendant box features three buttons – **Resume**, **Abort**, and **Pause** – for convenient control near the workpiece. These buttons have the same functions as those in the UGS top toolbar.

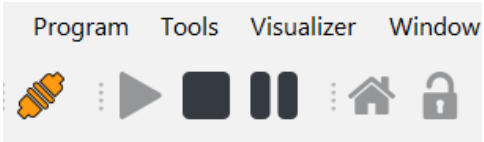

Z - AXIS PROBING

- The touch probe measures the workpiece's Z-axis origin automatically.
- Install the cutting bit into the spindle.
- Jog the spindle above the workpiece.
- Plug the probe into the pendant box.
- Place the probe base on the surface of the workpiece, directly under the cutting bit.
- Lower the Z axis until the end mill is less than 10 mm above the probe base.
- Attach the magnet end to the cutting bit.

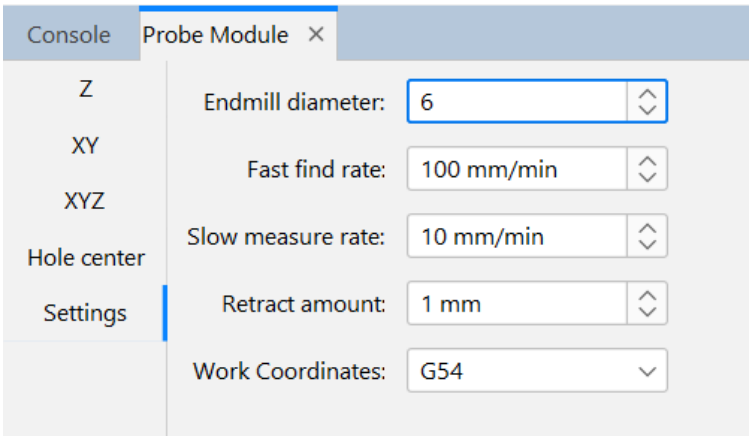

- In UGS, click “Probe Module” tab and go to “Settings”.
- Set the following:
  - Fast Find Rate: 100 mm/min
  - Slow measure rate: 10 mm/min
  - Retract amount: 1 mm
- Under “Z” tab:
  - Touch plate thickness: 18.9 mm
  - Probe distance/Direction: -10 mm
- Click “Probe and Zero Z” button to start Z Probe process.
- **It is strongly recommended to run a virtual probing first to confirm probe connectivity and prevent damage to the cutting bit.**
- Jog to the desired origin of the workpiece.
- Press “X0” and “Y0” in the Digital Readout panel to set the X, Y origin in the WCS.

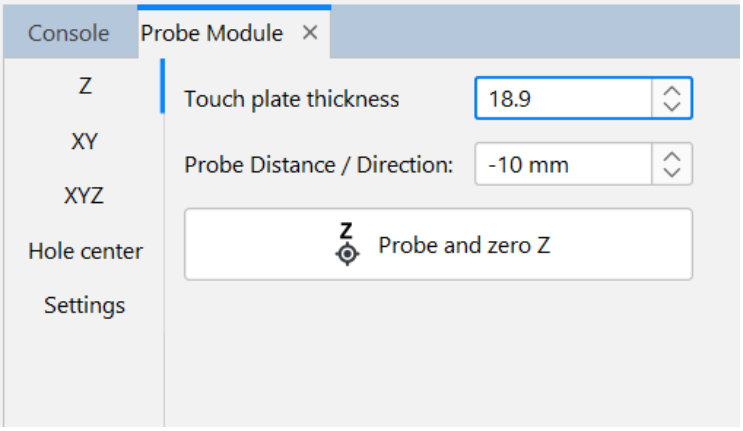

VFD AND SPINDLE

⚠ WARNING:

- **Do not modify vfd parameters unless you fully understand their function. Incorrect configuration may damage the spindle or vfd.**
- **Never operate the spindle without properly securing the collet nut and cutting bit. Unsecured components can cause serious injury.**
- **The vfd included with this machine is pre-configured to operate with the specified spindle. Reconfiguration is necessary to use a different spindle. See the vfd manual.**
- **The included 24,000 RPM high-speed spindle requires a minimum speed of 3,000 RPM (Revolutions Per Minute) to maintain sufficient torque and cooling. Consequently, the spindle will automatically stop if the commanded speed falls below this threshold.**
- The spindle RPM is equal to sixty times the pulse frequency displayed on the VFD.
- The VFD is controlled by UGS software. Manual spindle control on the VFD using keypad and dial is disabled.
- Always perform a full spindle run-in before placing a cold spindle into operation. This ensures optimal performance and maximizes spindle lifespan.
- Spindle Break-In:

  Perform this procedure if the spindle is brand new, has been idle for more than two weeks, or if the bearings have been replaced. During the process, ensure the spindle temperature remains low enough to comfortably touch with your bare hand.

  Stage 1: 3000 RPM, 20s run, 60s stop, 5 times
  Stage 2: 5000 RPM, 20s run, 60s stop, 5 times
  Stage 3: 8000 RPM, 20s run, 60s stop, 5 times
  Stage 4: 12000 RPM, 20s run, 120s stop, 5 times
  Stage 5: 18000 RPM, 20s run, 120s stop, 5 times
  Stage 6: 24000 RPM, 20s run, 120s stop, 5 times
  Stage 7: 24000 RPM, 30s run, 120s stop, 10 times
  Stage 8: 24000 RPM, 60s run, 60s stop, 10 times
  Total time: 100 minutes.
- Spindle Warm-Up:

  Run this procedure prior to spindle operation if the spindle has been unused for more than two hours.

```
M3 S3000
G4 P180 ; 3 minutes at 3000 RPM
M3 S4000
G4 P180 ; 3 minutes at 4000 RPM
M3 S6000
G4 P180 ; 3 minutes at 6000 RPM
M3 S8000
G4 P180 ; 3 minutes at 8000 RPM
M3 S12000
G4 P180 ; 3 minutes at 12000 RPM
M3 S18000
G4 P180 ; 3 minutes at 18000 RPM
M3 S24000
G4 P180 ; 3 minutes at 24000 RPM
M5
M30
```

VFD Factory Settings

Code	Name / Description	Value	Parameters / Notes
P0-01	Motor Control Mode	2	V/F Control
P0-02	Command Source Selection	1	Terminal Command Channel
P0-03	Main Frequency Source X	2	AI1
P0-10	Maximum Frequency	400	400Hz
P0-11	Upper Limit Frequency Source	0	Set by P0-12
P0-12	Upper Limit Frequency	400	400Hz
P0-14	Lower Limit Frequency	50	50Hz
P0-22	Frequency Command Resolution	1	1: 0.1Hz, 2: 0.01Hz
P1-00	Motor Type Selection	0	Standard Asynchronous Motor
P1-01	Motor Rated Power	1.5	Spindle specifications
P1-02	Motor Rated Voltage	110	Spindle specifications
P1-03	Motor Rated Current	15	Spindle specifications
P1-04	Motor Rated Frequency	400	Spindle specifications
P1-05	Motor Rated Speed	24000	Spindle specifications
P3-01	Torque Boost	2	2%. If spindle stutters, fails to start, or errors, increase in 0.5% increments (max 5%).
P3-02	Torque Boost Cut-off Frequency	50	50Hz
P4-00	DI1 Terminal Function Selection	0	No function
P4-01	DI2 Terminal Function Selection	1	Run Forward (Change to 2 if spindle runs in reverse)
P4-11	Terminal Command Mode	0	2-wire mode 1
P4-13	AI Curve 1 Min. Input Setting	0.2	0.2V linear calibration
P4-15	AI Curve 1 Max. Input Setting	9.7	9.7V, PWM converted voltage when 24,000 rpm
P4-16	AI Curve 1 Max. Input Value Setting	100	100%
P4-39	AI1 Input Voltage/Current Selection	0	Voltage Input
P8-14	Run Mode When Set Freq. < Lower Limit	1	Stop

TROUBLESHOOTING

CATEGORY	PROBLEM	CAUSE	SOLUTION
Limit Sensor	LED not lit	• Senser is triggered. • Cable connection issues • The senser failure	• Move the trip flag away • Fix or replace cable or connectors • Replace the senser
	LED stays on	• Sensor too far from or not aligned with trip flag	• Reposition the senser
	UGS Setup Wizard does not show triggered state	• Cable connection issue	• Fix or replace cable or connectors
Motion	No movement	• Cable connection issue • Loose shaft coupling	• Fix or replace cable or connectors • Tighten coupling set screws
	Z-axis motor hums but doesn't move	• Z-brake not released	• Check Z-brake and its cable connection
	X-assembly hard to slide on Y-axis	• X-assembly misaligned	• Square the x-assembly
	Incorrect jog direction or distance	• Incorrect GRBL settings	• Review and correct settings in UGS Setup Wizard
	Abnormal noise during jogging	• Loose or misaligned mechanical parts	• Inspect shaft couplings, ball screw nuts, and linear guides
	Axis stall during motion	• Dust on ball screws or linear rails • Lack of lubrication • speed too high, overloaded	• Clean ball screws and linear rails • Apply grease on ball screws and linear rails • Reduce travel speed
	UGS stop randomly / limit switch or USB Alert	• electromagnetic interference (EMI)	• Check the grounding • Check cable connection • Power the control box from separate outlet on different circuit
Control Box	Power switch LED on, but no power in	• Blown fuse	• Replace the fuse inside the controller
Probe	Probing won’t stop	• Connection issue	• Check pendant box and cable connections
VFD	No power	• Blown fuse	• Replace the fuse inside the VFD enclosure
	Spindle not spinning	• Connection issue • Incorrect VFD settings	• Check cable and connector • Review and correct VFD settings
Software	UGS not responsive	• Software crash or disconnect	• Reconnect or reset the controller

©2025 Carvemate Machines Inc.